Grid-connected Small Wind (100 kW and less)

Trudy Forsyth
National Wind Technology Center
National Renewable Energy Laboratory
September 2007

On-Grid Wind System without Storage

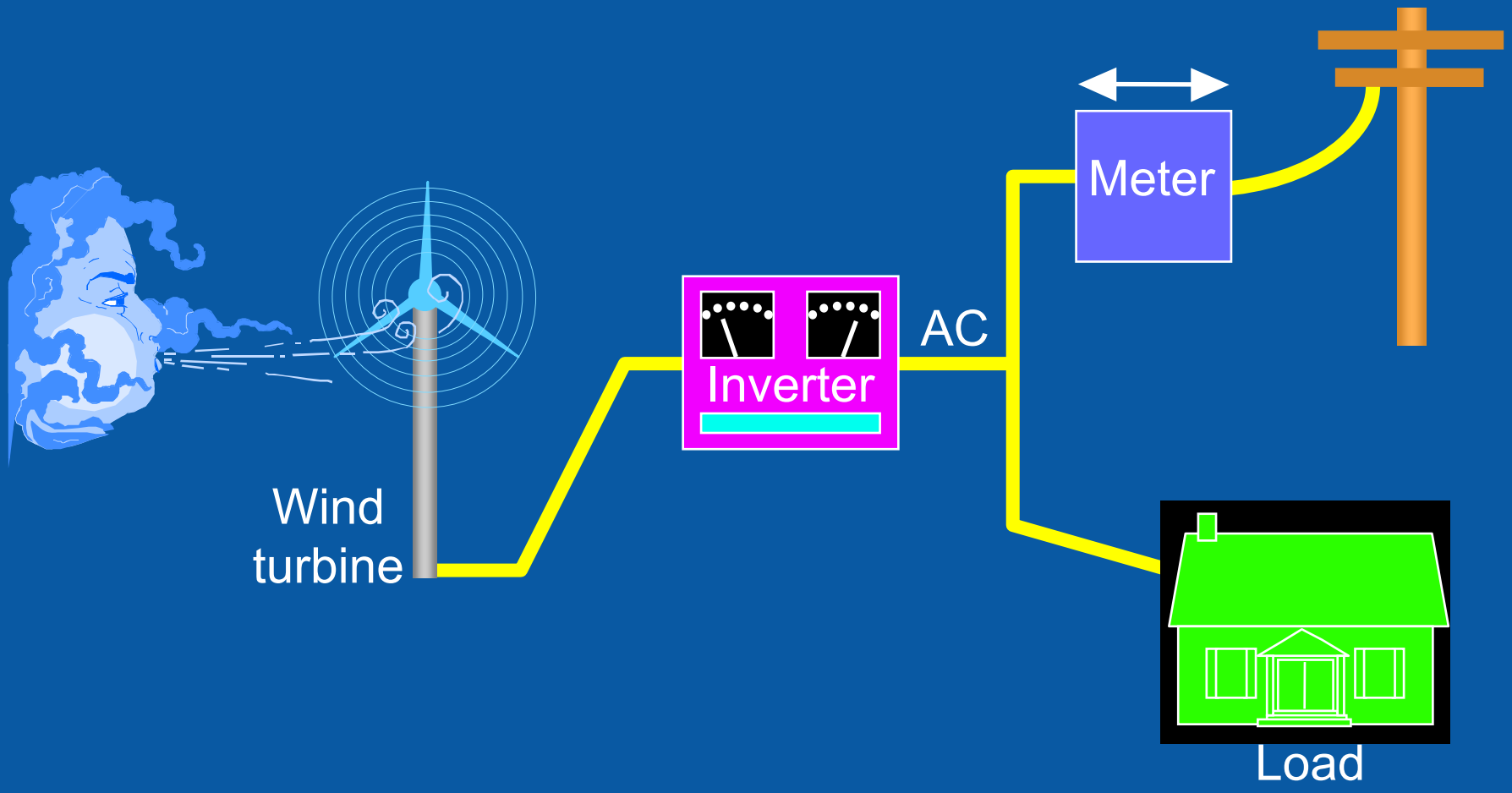

NREL National Renewable Energy Laboratory 02770329

Overview of presentation

- Small Wind Technology Application
- Small Wind Technology 101
- Summary of commercially available turbines
  - New
  - Refurbished
- Summary of incentives
- Net Metering
- Case Studies of small wind
- More information
- Future DWT plans

Wind Energy History in Rural America

Water-pumping wind mills, from about 1860

"Wind-chargers" for electric power, during the 1930's - 50's

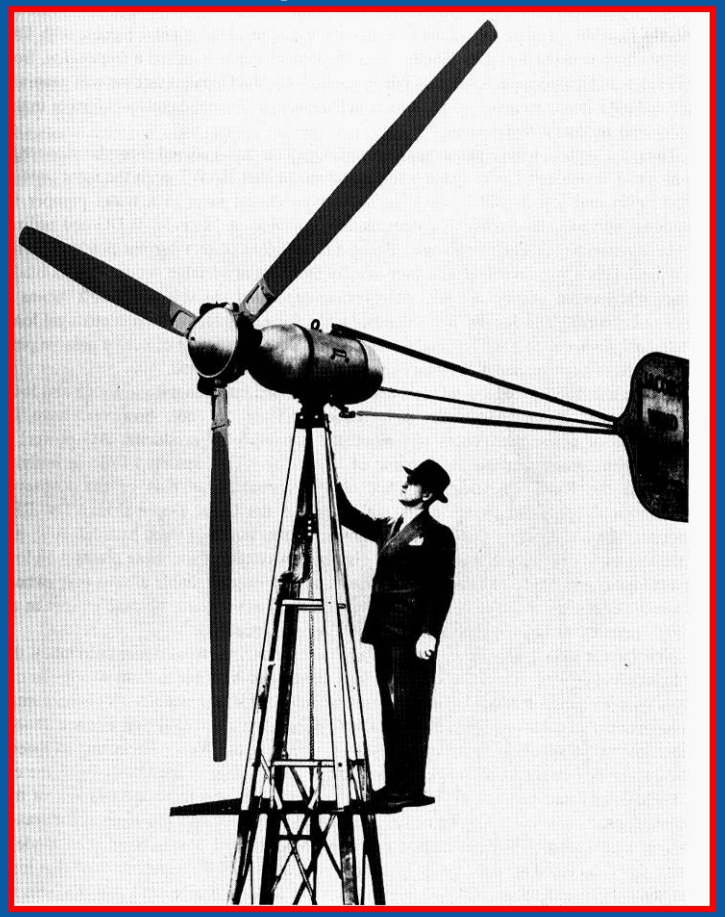

Small Wind Power

Behind the Meter

Small Wind Turbines

- Configuration: 2 or 3 blades aimed into the wind by the tail
- Blades: Fiber-reinforced plastics
- Over-Speed Protection: Furling (rotor turns out of the wind), no brakes
- Generator: Direct-drive, permanent magnet alternator (no brushes), 3-phase AC, variable-speed operation
- Controller: Electronic device that delivers
  - DC power for charging batteries
  - AC power for utility interconnection
- Result:
  - Simple, rugged design
  - Only 2–4 moving parts
  - Little regular maintenance required

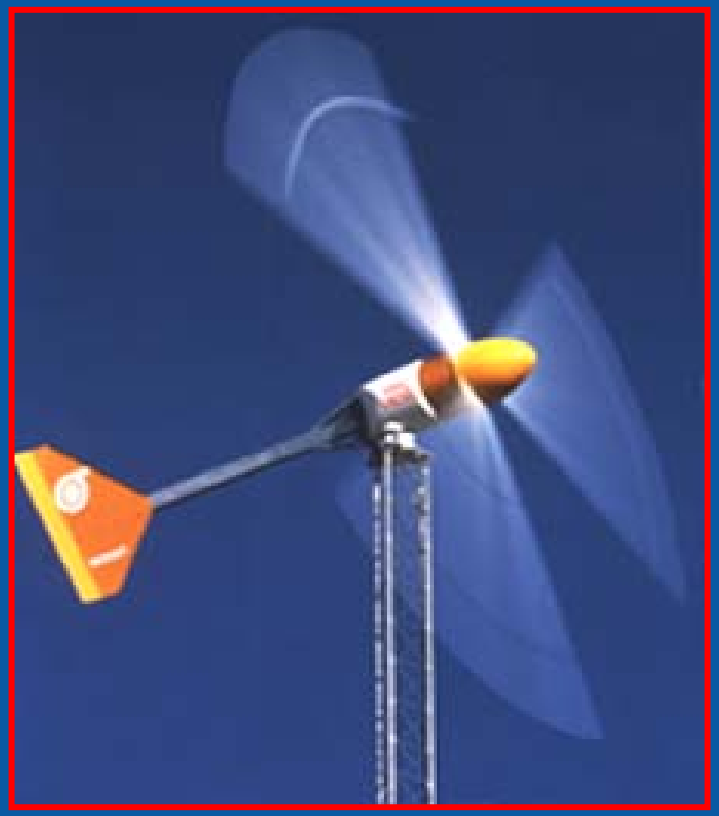

Bergey EXCEL, 10 kW

Exploded version of Bergey Excel

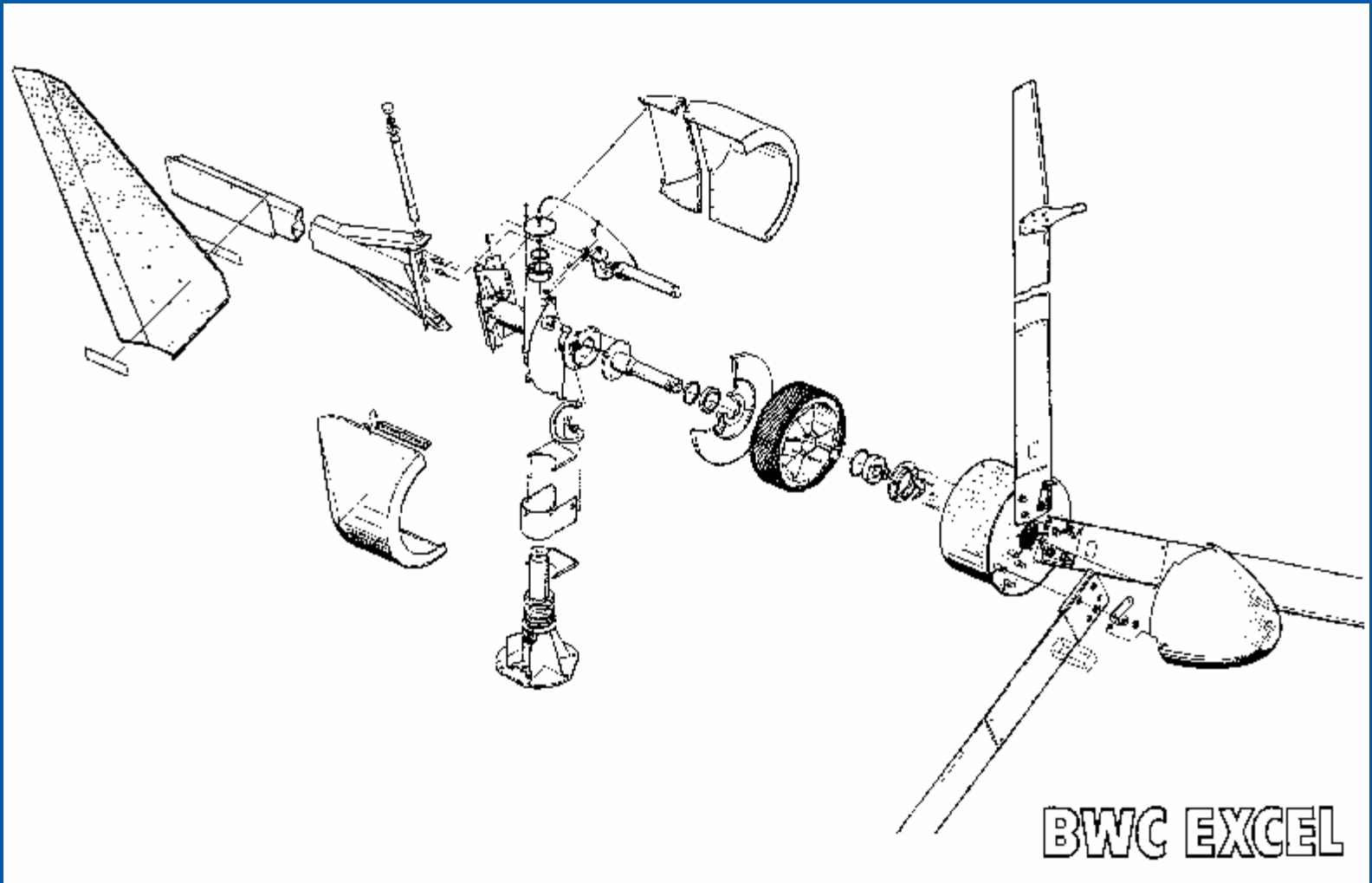

Over-Speed Protection During High Winds

- Angle Governor: The rotor turns up and to one side

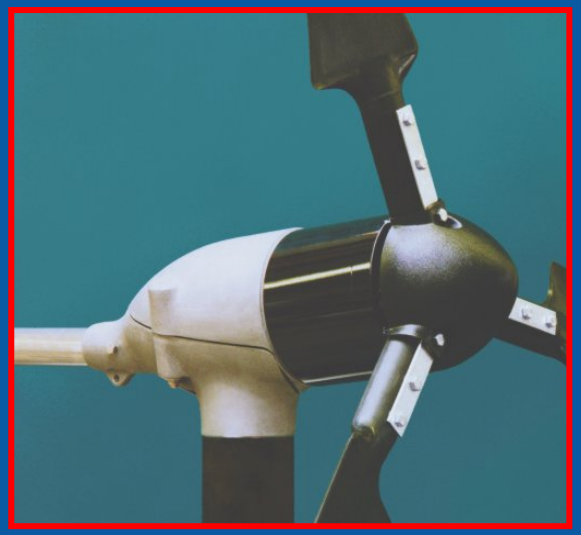

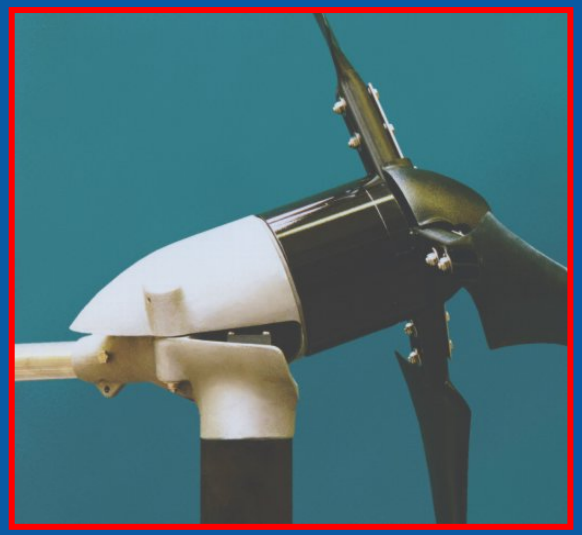

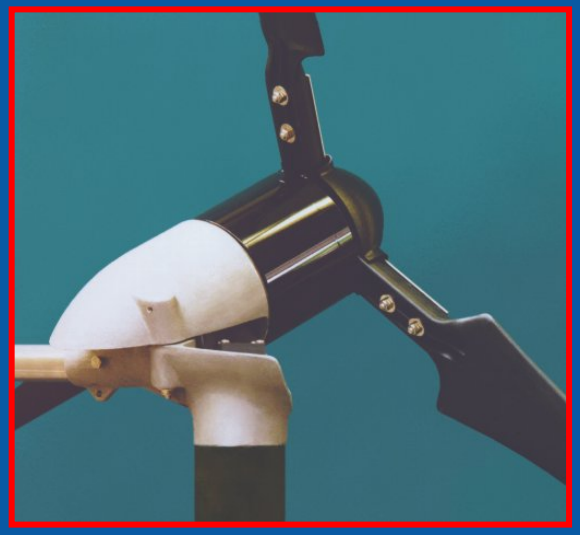

Small Wind Turbine Towers

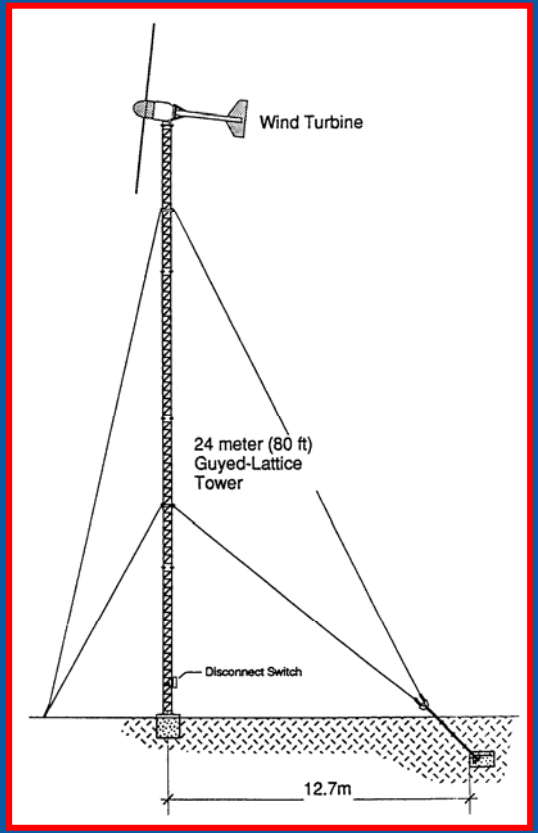

Guyed Tower

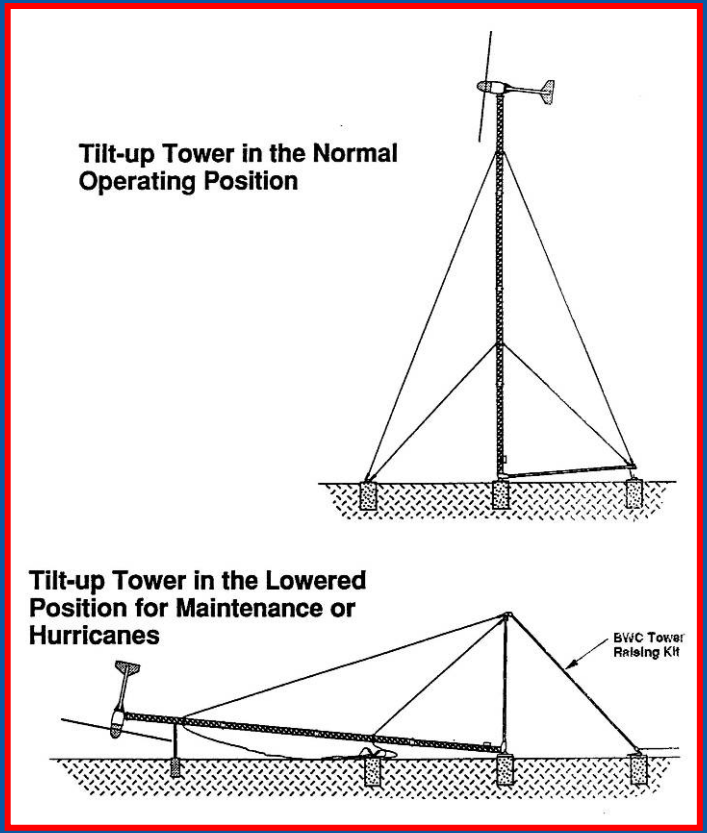

Tilt-Up Tower

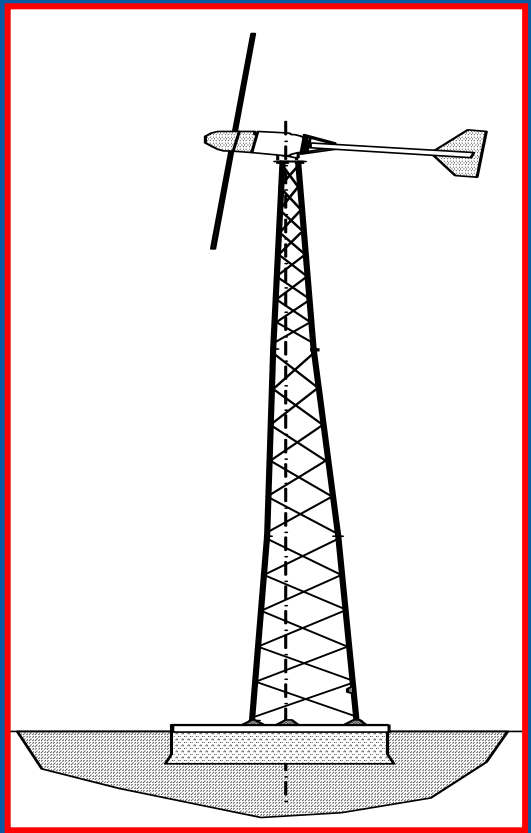

Self-Supporting Tower

Southwest Windpower

Flagstaff, Arizona www.windenergy.com

Skystream 3.7
1.8 kW
12 ft Dia.
Grid-Connect

Key Implementation Details

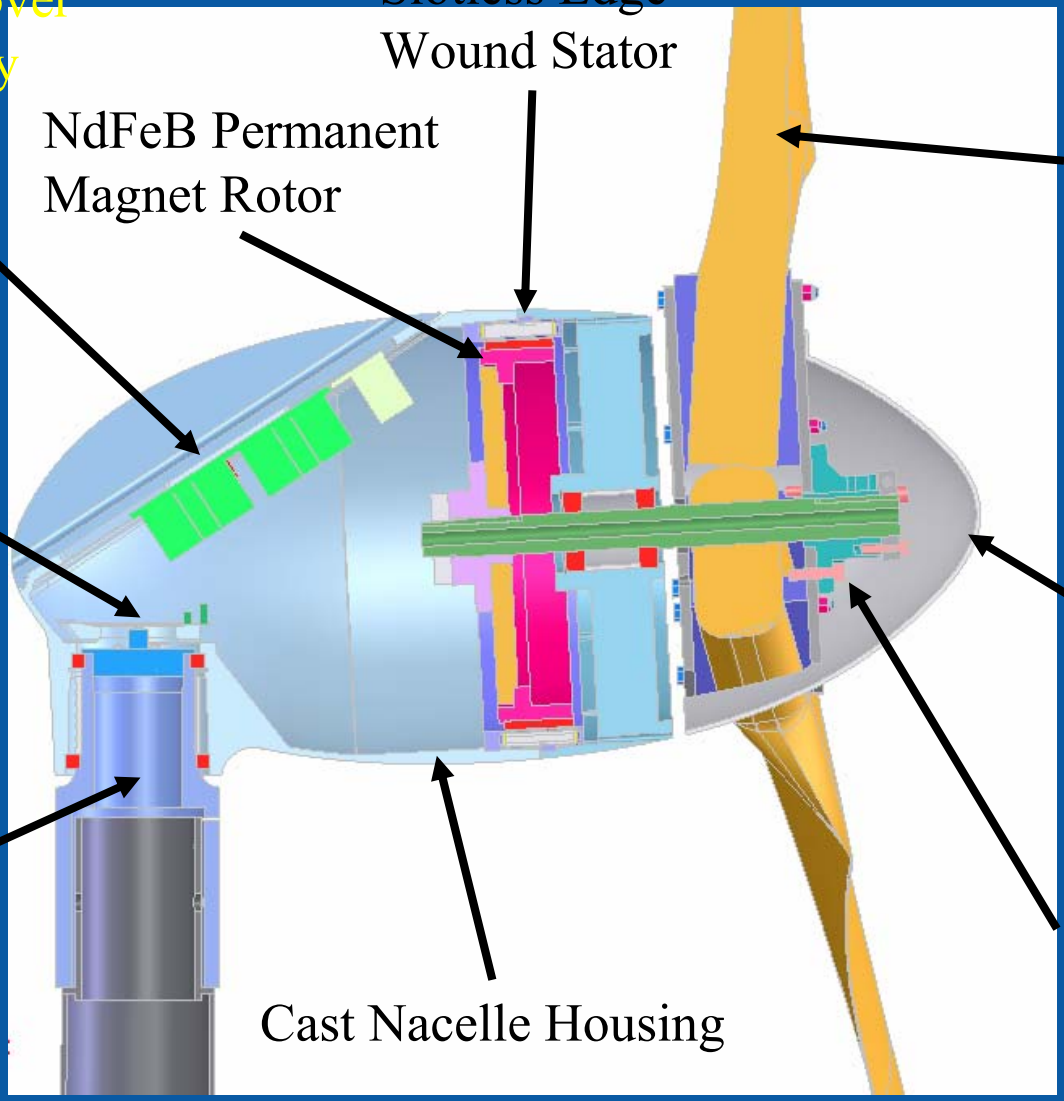

GL Provisional Certification

- International Electrotechnical Commission (IEC) standards
- 61400-2 Small Wind Design
- 61400-11 Power Performance
- 61400-12 Acoustics
- 61400-22 Power Quality

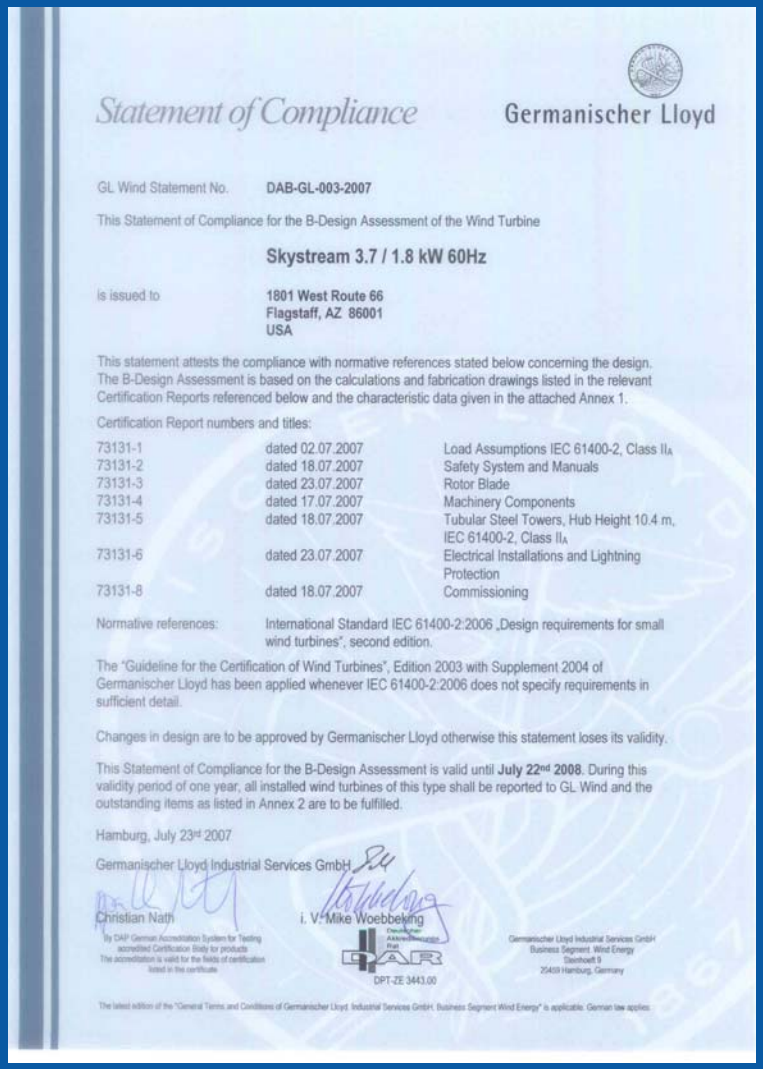

Statement of Compliance Germanischer Lloyd

GL Wind Statement No. **DAB-GL-003-2007**

This Statement of Compliance for the B-Design Assessment of the Wind Turbine

Skystream 3.7 / 1.8 kW 60Hz

is issued to **1801 West Route 66**
Flagstaff, AZ 86001
USA

This statement attests the compliance with normative references stated below concerning the design. The B-Design Assessment is based on the calculations and fabrication drawings listed in the relevant Certification Reports referenced below and the characteristic data given in the attached Annex 1.

Certification Report numbers and titles:

73131-1	dated 02.07.2007	Load Assumptions IEC 61400-2, Class II_A
73131-2	dated 18.07.2007	Safety System and Manuals
73131-3	dated 23.07.2007	Rotor Blade
73131-4	dated 17.07.2007	Machinery Components
73131-5	dated 18.07.2007	Tubular Steel Towers, Hub Height 10.4 m, IEC 61400-2, Class II_A
73131-6	dated 23.07.2007	Electrical Installations and Lightning Protection
73131-8	dated 18.07.2007	Commissioning

Normative references: International Standard IEC 61400-2:2006 „Design requirements for small wind turbines", second edition.

The "Guideline for the Certification of Wind Turbines", Edition 2003 with Supplement 2004 of Germanischer Lloyd has been applied whenever IEC 61400-2:2006 does not specify requirements in sufficient detail.

Changes in design are to be approved by Germanischer Lloyd otherwise this statement loses its validity.

This Statement of Compliance for the B-Design Assessment is valid until **July 22nd 2008**. During this validity period of one year, all installed wind turbines of this type shall be reported to GL Wind and the outstanding items as listed in Annex 2 are to be fulfilled.

Hamburg, July 23rd 2007

Germanischer Lloyd Industrial Services GmbH

Christian Nath i. V. Mike Woebbeking

DPT-ZE 3443.00

Germanischer Lloyd Industrial Services GmbH
Business Segment Wind Energy
Daenhoeft 9
25459 Hamburg, Germany

The latest edition of the "General Terms and Conditions of Germanischer Lloyd Industrial Services GmbH, Business Segment Wind Energy" is applicable. German law applies.

School Wind in Milford, Utah

Persistent champion – Andy Swapp

Very successful student participation

"We used geometry's Pythagorean theorem to set the anchors and the base for the tower. On the bus trip back, I heard some of my students talking about math and how excited they were to be able to use it in real life. That was the crowning moment for me, to see the theory coming to life for these kids and the light bulb coming on," Swapp said.

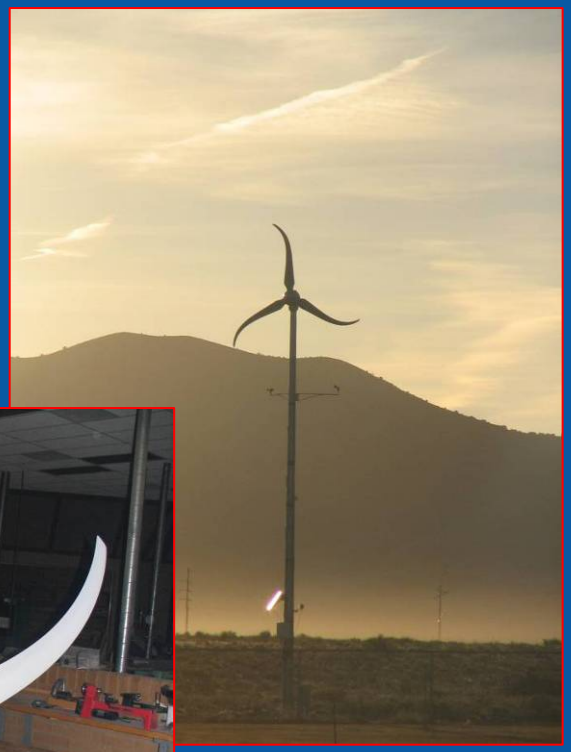

Windward Endurance Wind Turbine

5.5 m diameter; 5 kW; constant speed - 200 rpm

www.windwardengineering.com

Bergey Windpower

Norman, Oklahoma www.bergey.com

Abundant Renewable Energy

Newberg, Oregon www.abundantre.com

ARE110
2.5 kW, 12 ft Dia.
Battery-Charging
Grid-Connect

ARE442
10 kW, 24 ft Dia.
Battery-Charging
Grid-Connect

Wind Turbine Industries, Inc.

Prior Lake, Minnesota www.windturbine.net

Jacobs 31-20
20 kW, 31 ft Dia.
Grid-Connect

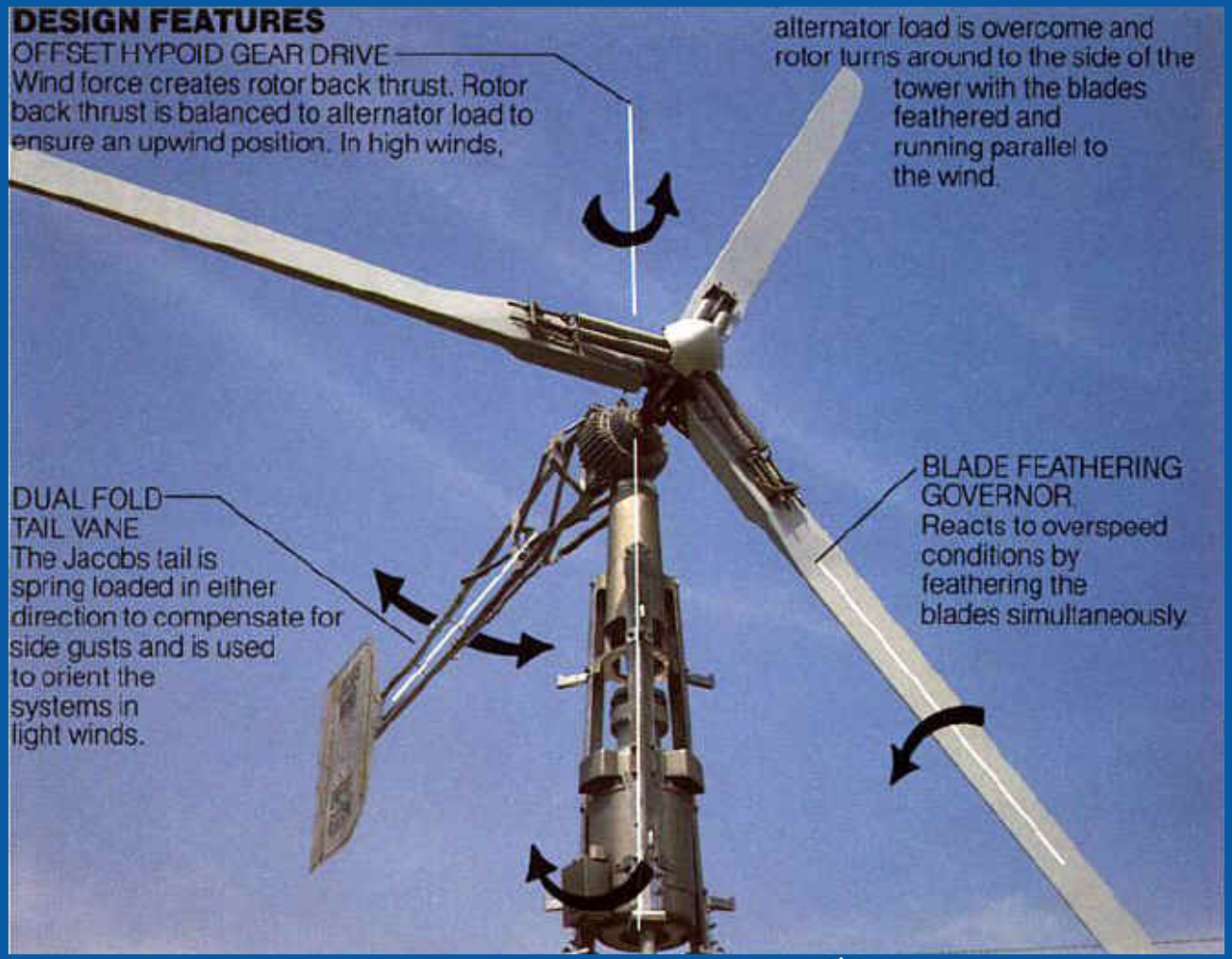

Entegrity Wind Systems, Inc

Prince Edward Island, Canada www.entegritywind.com

EW15
50 kW, 49 ft Dia.
Grid-Connect

Distributed Energy Systems

Barre, Vermont www.distributed-energy.com

NorthWind 100/21
100 kW, 69 ft dia.
Grid-Connect

Next Generation Power Systems Inc.

Sioux Falls, South Dakota www.nexgenpowersystems.com

NG 12.5 (Remanufactured)
39.5 kW (1 or 3 phase)
41 ft Dia.
Grid-Connect

Energy Maintenance Services

Gary, South Dakota www.energyms.com

E15 (Remanufactured)
35 kW (1 or 3 phase)
65 kW (3 phase)
50 ft Dia.
Grid-Connect

Halus Power Systems

Hayward, California www.halus.com

Remanufactured
Vestas, 65 to 500 kW
Grid-Connect

Other Names

(as of June 2007, not comprehensive)

- Start-Up Companies
  - Aerovironment, Earth Turbines (debut June 2008), Energie PGE, Mariah Power, PacWind, Selsam, Ventera (debut June 2007)
- Imports
  - Aircon, Bornay, Eoltec (Pine Ridge Products, Montana), Fortis (Fortis America), Iskar (DC Power Systems, California), Kestrel (DC Power Systems, California), Proven (3 dealers in North America), Swift, Wind Energy Solutions, various Chinese turbines
- Micro Turbines (< 1 kW)
  - Aeromag/Aeromax, Hornet, Amp Air, EverFair, etc.

New Technology Questions

- What is the performance?
  - Power curve or annual energy output
  - System performance (power to the grid)
- Was this performance measured in a field test?
  - Not estimated, not from wind tunnel or truck testing
- Has this performance been independently verified?
- Is it labeled for compliance with UL 1741?
  - For safe interconnection to the utility grid
- Is it compliant with an IEC design/safety standard?
- Who can provide parts and service?
- What is the warranty?
- Where has it been demonstrated?
- Is price estimated, or based on real manufacturing experience?

Residential Small Wind Incentives

www.dsireusa.org

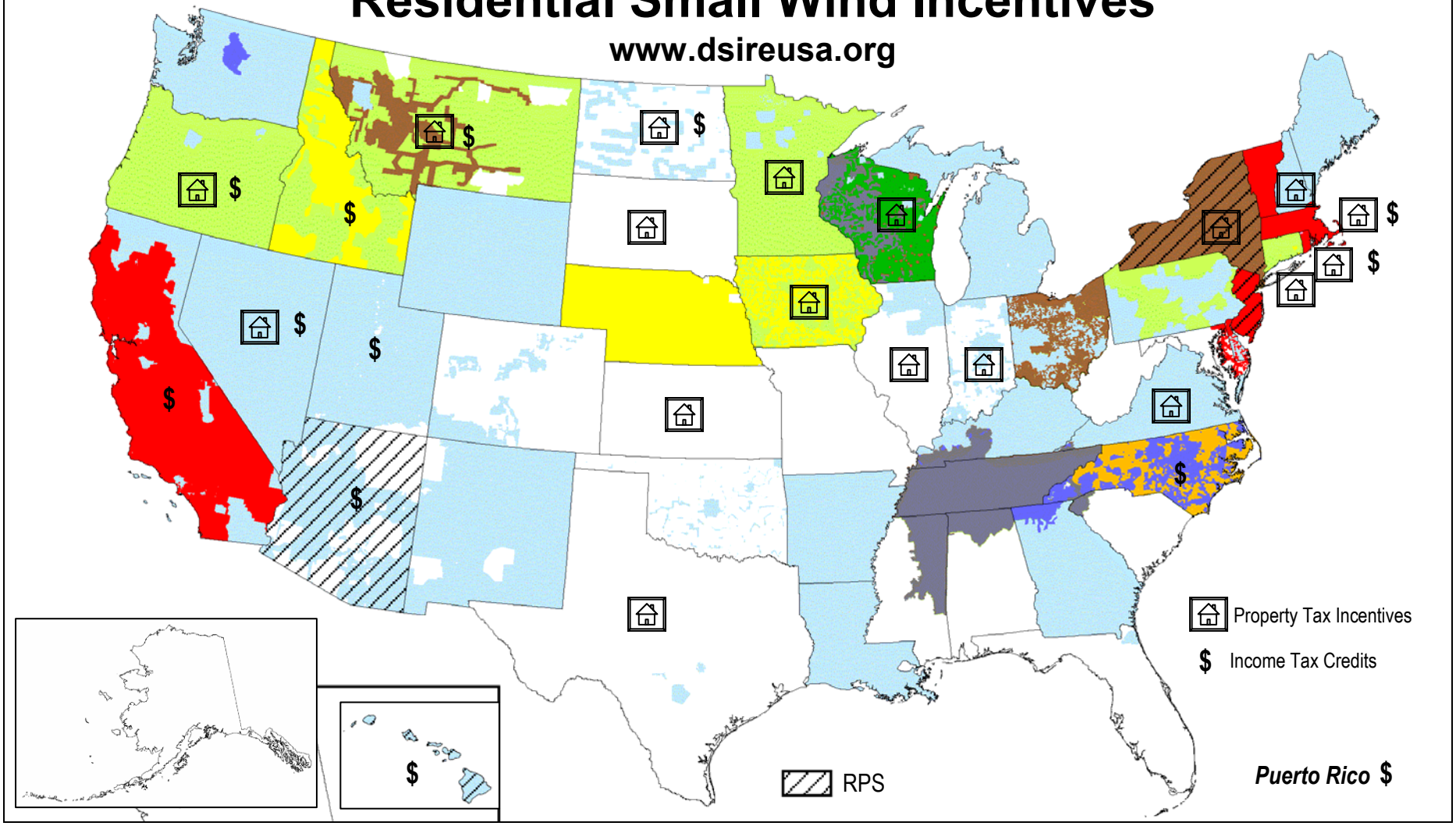

BUYDOWNS

- Buydown & Net Metering
- Buydown, Net Metering, & Loans

PRODUCTIVITY INCENTIVES

- Productivity Incentives & Loans
- Productivity Incentives
- Net Metering, Loans & Prod. Incentives
- Net Metering & Prod. Incentives

MINOR INCENTIVES

- Loans
- Net Metering & Loans*
- Net Metering

*In Minnesota, loans apply only to farmers.

Federal Incentives: Mainstay Energy – green tag purchase (CA excluded); USDA Federal Farm Bill Title 9006 – grant for rural areas

May 30, 2006

USDA Farm Bill Section 9006

www.rurdev.usda.gov/rbs/farmbill

Renewable Energy & Energy Efficiency:

wind	solar	biomass
geothermal	hydrogen	energy efficiency

- For rural farms, ranches, small businesses (not for residential systems)
- Grants (up to 25% of project cost), and/or Loan Guarantees (up to 50% of project cost)
- In 2005, a total of $21 million in grants were distributed to 150 projects in 32 states.
- Work with rural energy coordinators at your USDA State Rural Development Office
- Simplified application in 2006 for projects < $200,000

Clean Renewable Energy Bonds (CREBs)

- Created by Energy Policy Act of 2005 (Baucus & Grassley)
- Provide gov't entities with ability to obtain interest-free financing for renewable energy projects by providing investors with federal tax credit in lieu of interest payments
- 2006 CREBs were authorized for $800M through FY07:
  - $500M: Cities, Counties, Tribes
  - $300M: Rural Electric Co-ops
- House proposal for 2008 is $2 Billion
  - 60% municipalities
  - 40% Rural Electric Co-ops
- Allocations made from smallest to largest (pyramid)
- Excellent funding vehicle for county/city/tribally-owned renewable energy projects

matney-frantz engineering
Mike Costanti | Principal
105 W. Main St., Suite G | Bozeman, MT 59715
406.556.9827 | mcostanti@matneyfrantz.com
www.matneyfrantz.com

Net Metering of Renewable Energy

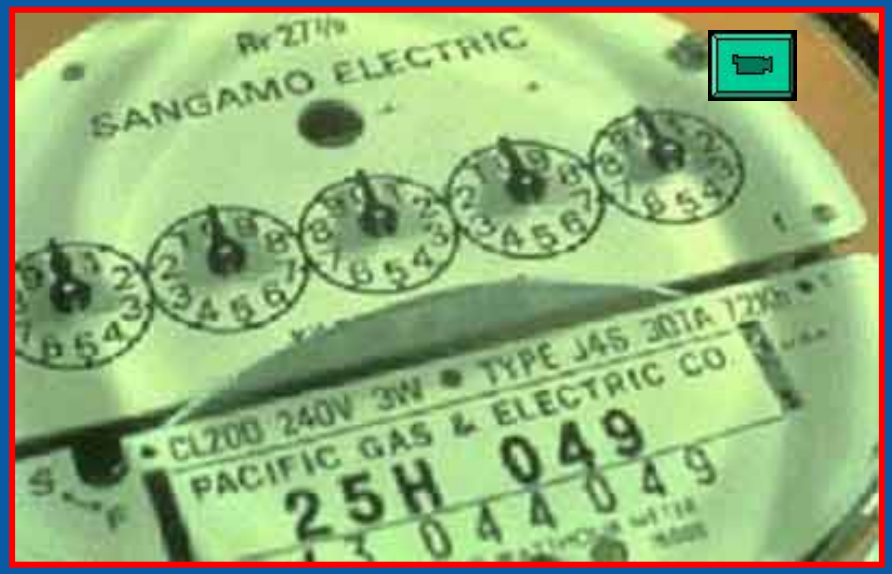

- Excess wind power turns the electric meter backward
- Bill is based on the "net" consumption/generation (monthly or annually)
- Net metering of wind energy is available to:
  - All residential (including rural) customers in 25 states
  - Some residential customers (mostly urban) in 15 other states

Meter Configuration For Net Billing

Two meters, two rates.
"Net" refers to net $.

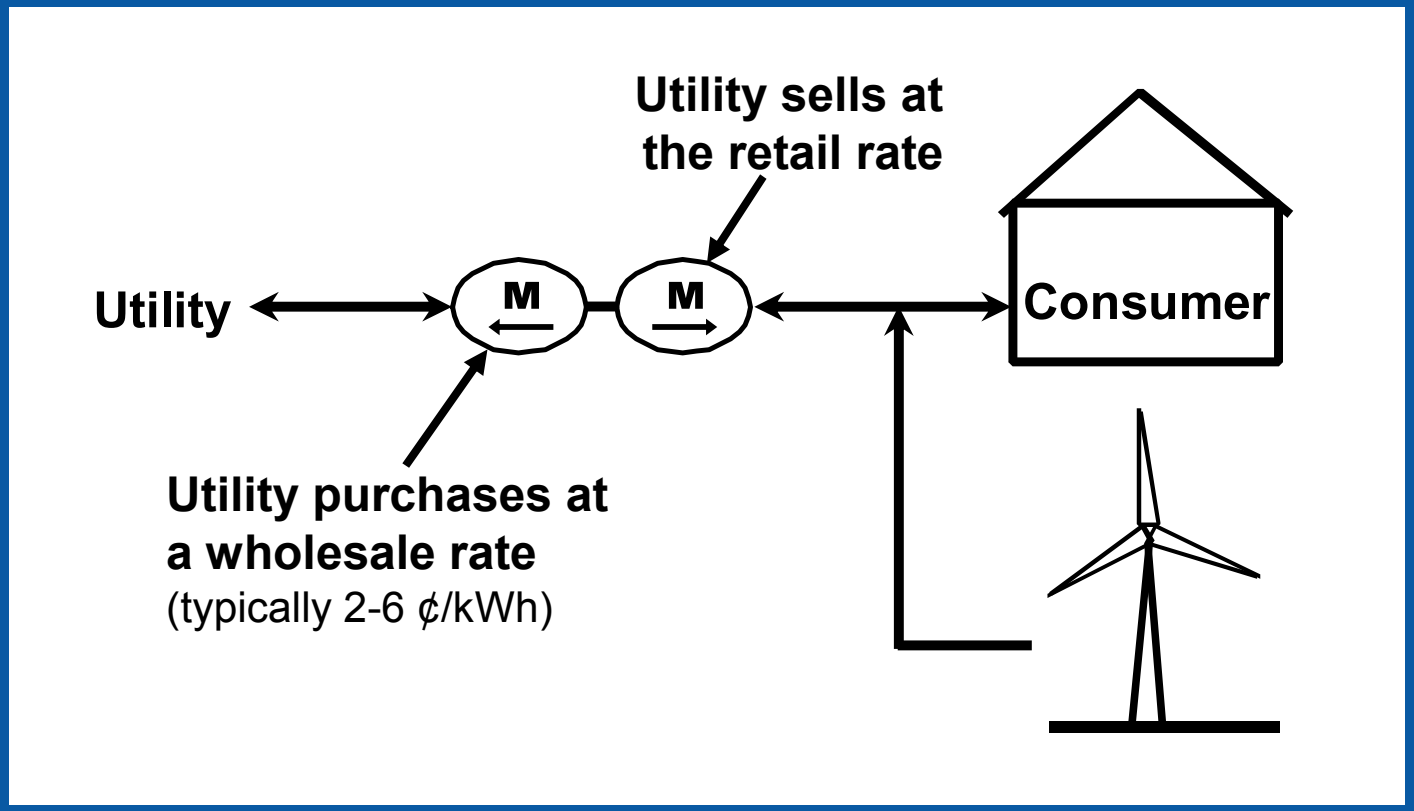

Meter Configuration For Net Metering

One meters, one rate.
"Net" refers to net kWhs.

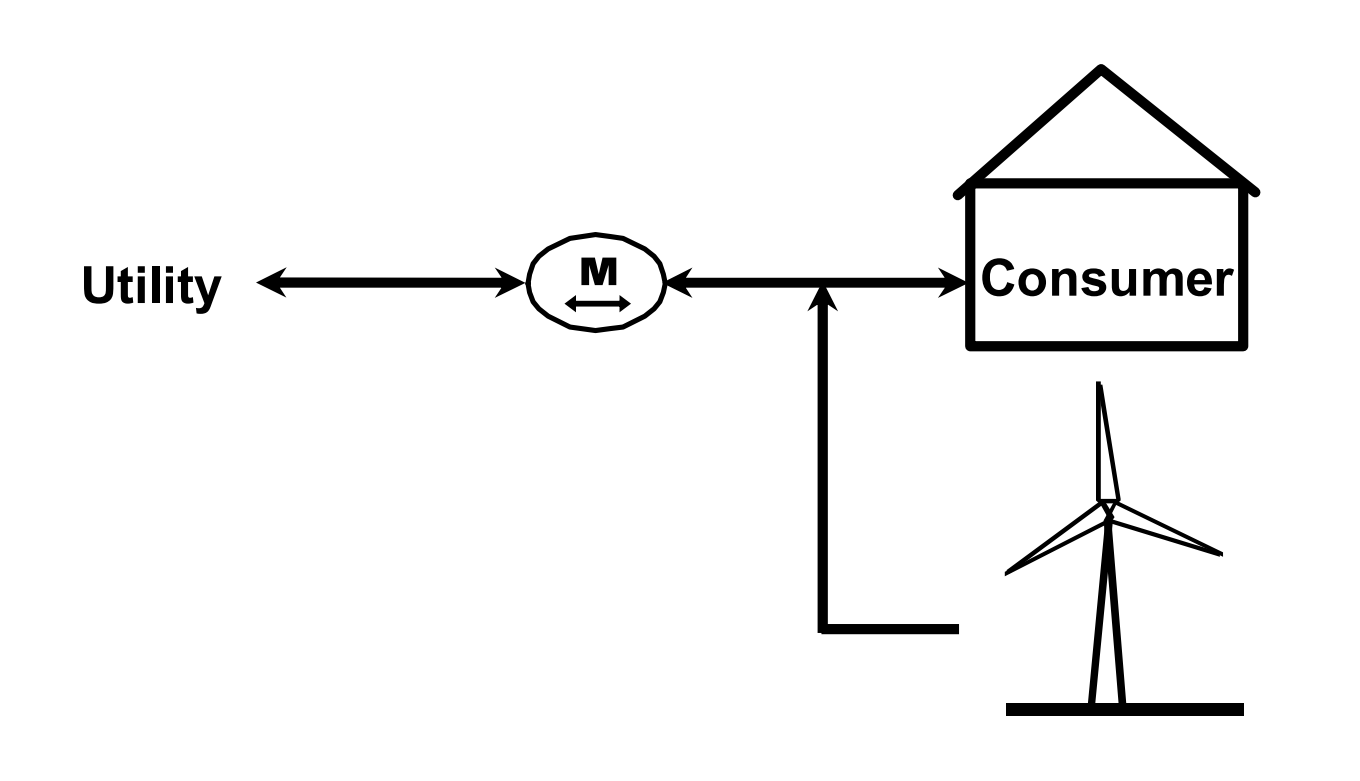

Net Metering of Renewable Energy

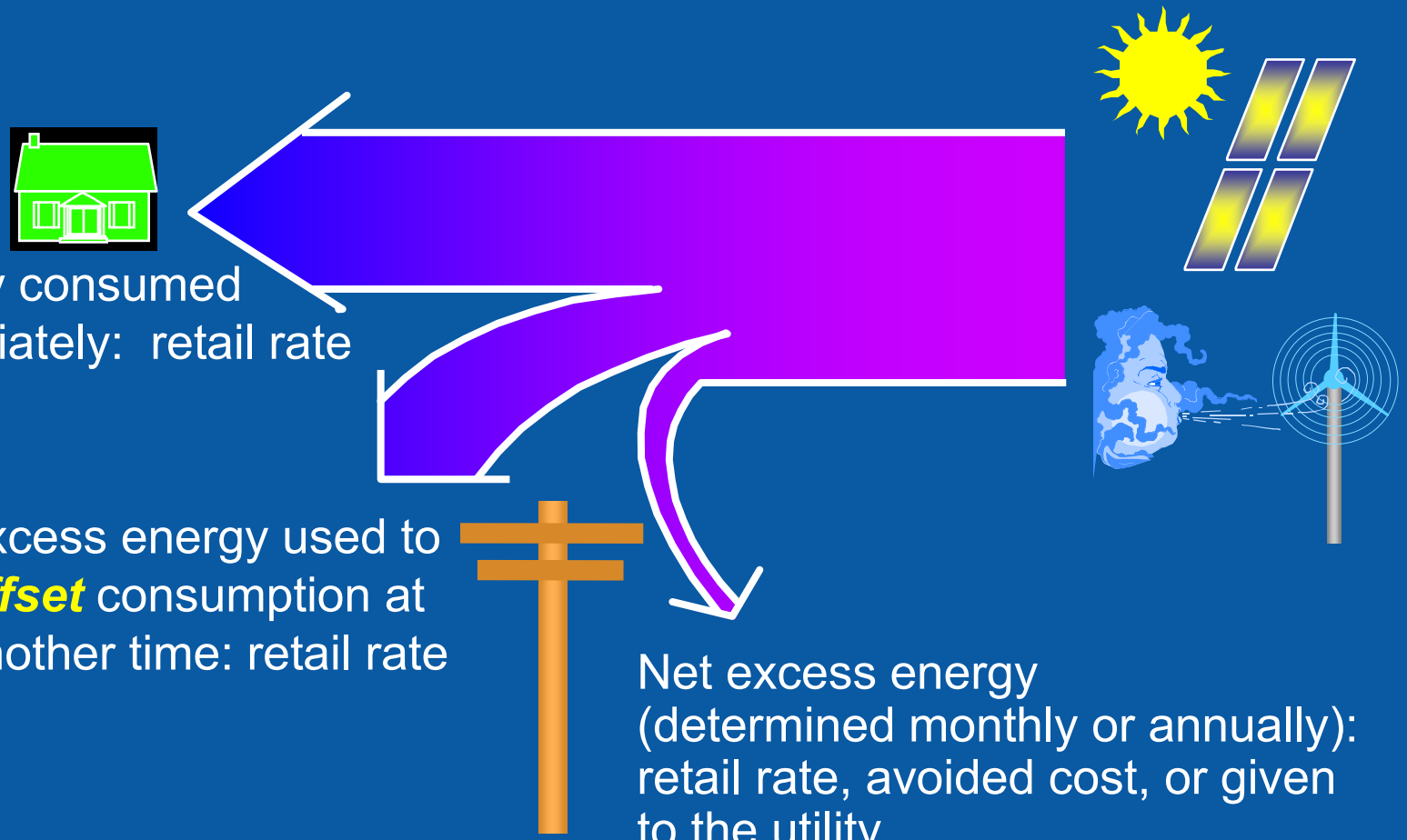

Case Study: On-Grid Farm

Jess Alger's Ranch - Stanford, MT

- Fourth generation Montana farmer 1,200 acre ranch/farm
- Wind used to offset electricity consumed by home and farm operations
- Turbine installed September 2003
- 12 mph annual average wind speed (Class 3)
- 10kW turbine on a 100 foot tower

Alger's Estimated Cost and Production

- Installed Turbine System - $36,850
  - Lower than typical
    - Turbine system costs only, no dealer payment
    - Site preparation done by J. Algers
- USDA RESG (25% grant) - $7,696
- Montana NCAT USB Funds - $12,500
- Estimated electricity used 14,200 kWh/yr
- Estimate electricity produced 18,000 kWh/yr (based on Class 3 wind site)

Small Wind Economics
Bergey Excel on 100ft Tower

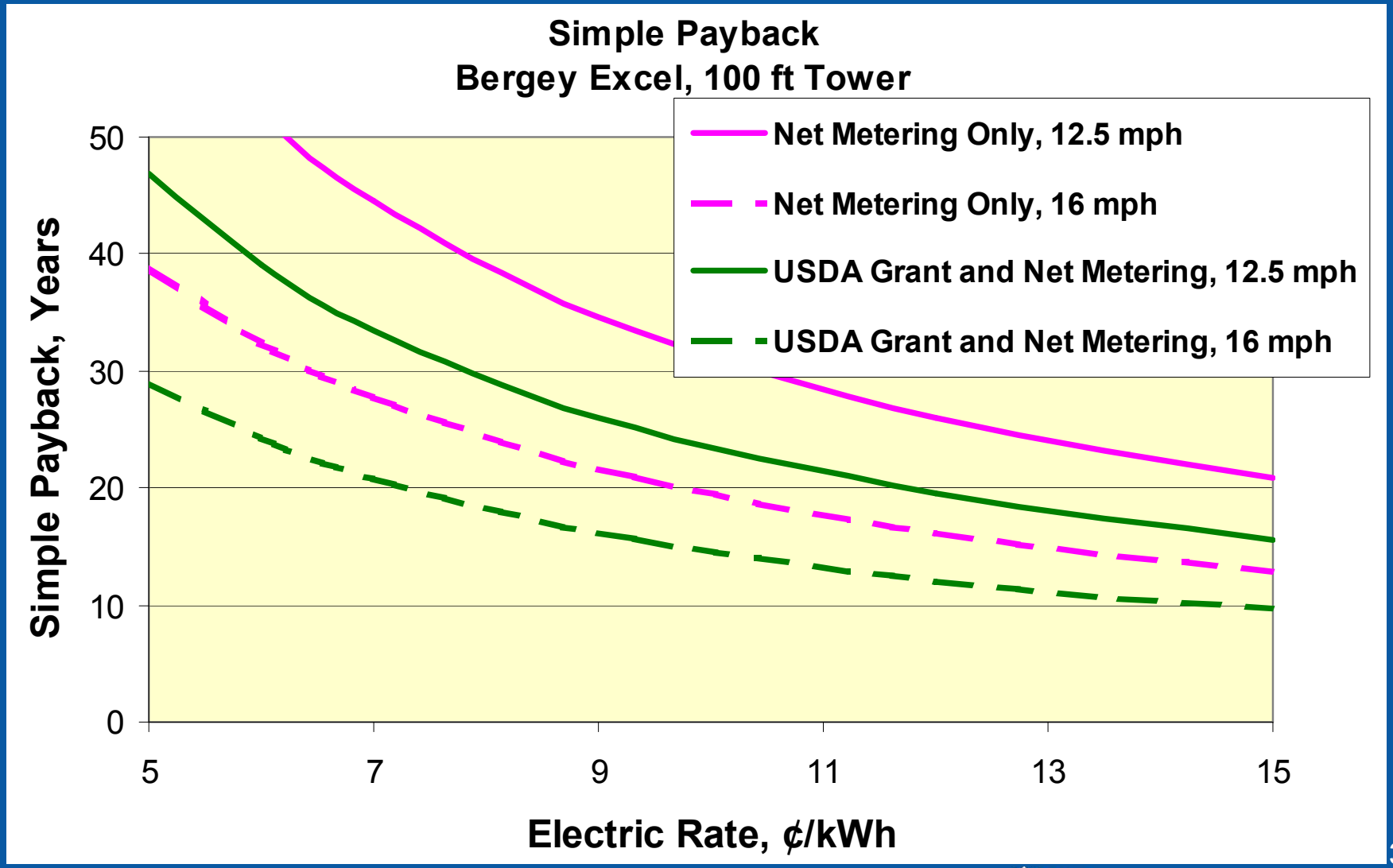

Zeeland West High School- Holland, Michigan

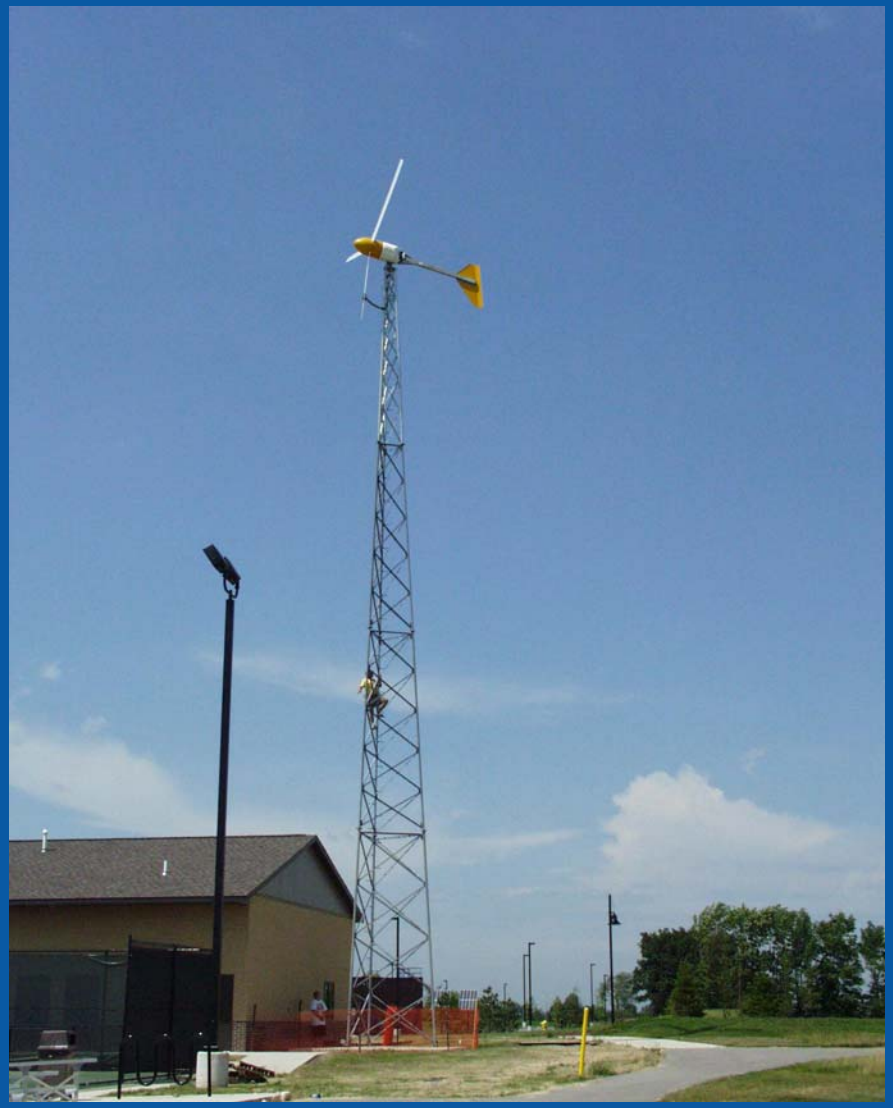

- 10-kW Bergey XL-10 on an 85-foot tower
- Financed primarily through donations, including a local contractor
- The school uses all of the electricity generated
- Annual utility bill savings = $1200.

Spirit Lake Community School District- Spirit Lake, Iowa

- 250-kW and 750-kW turbines
- Funding: DOE grant and low-interest loan from Iowa DNR
- District has saved more than $125,000 on utility bills
- When both turbines are paid off in 2007, the revenue generated (est. $120K/year) will be used for school programs
- Used in district's curriculum.

Case Study - 3 phase grid-connect

Wubben Wood Products

- Small Industry - finished wood products for homebuilders
- Installed in June 2004
- 3 – Micon 65 kW turbines on 110’ towers at a cost of $85k per turbine
- $45k/turbine from WI Focus on Energy (max 35% of project cost)
- 256,560 kWh/yr (enough energy for 26 homes) expected or ~80% of electrical needs
- Payback expected in 12 years

Small Wind Economics

Micon 65kW on 110ft Tower

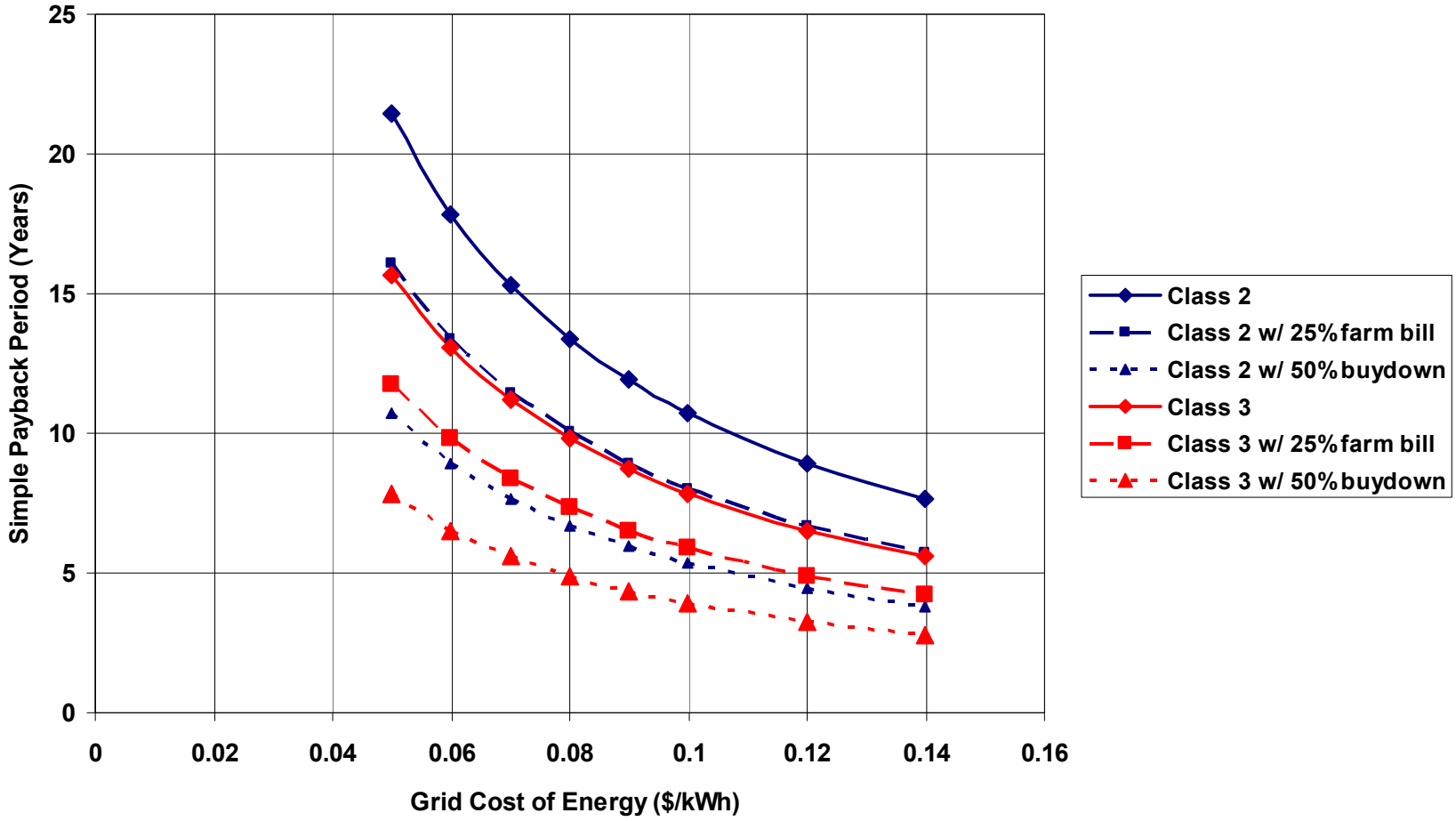

Net Metering for Wind

28 states have net metering for all rural electric consumers

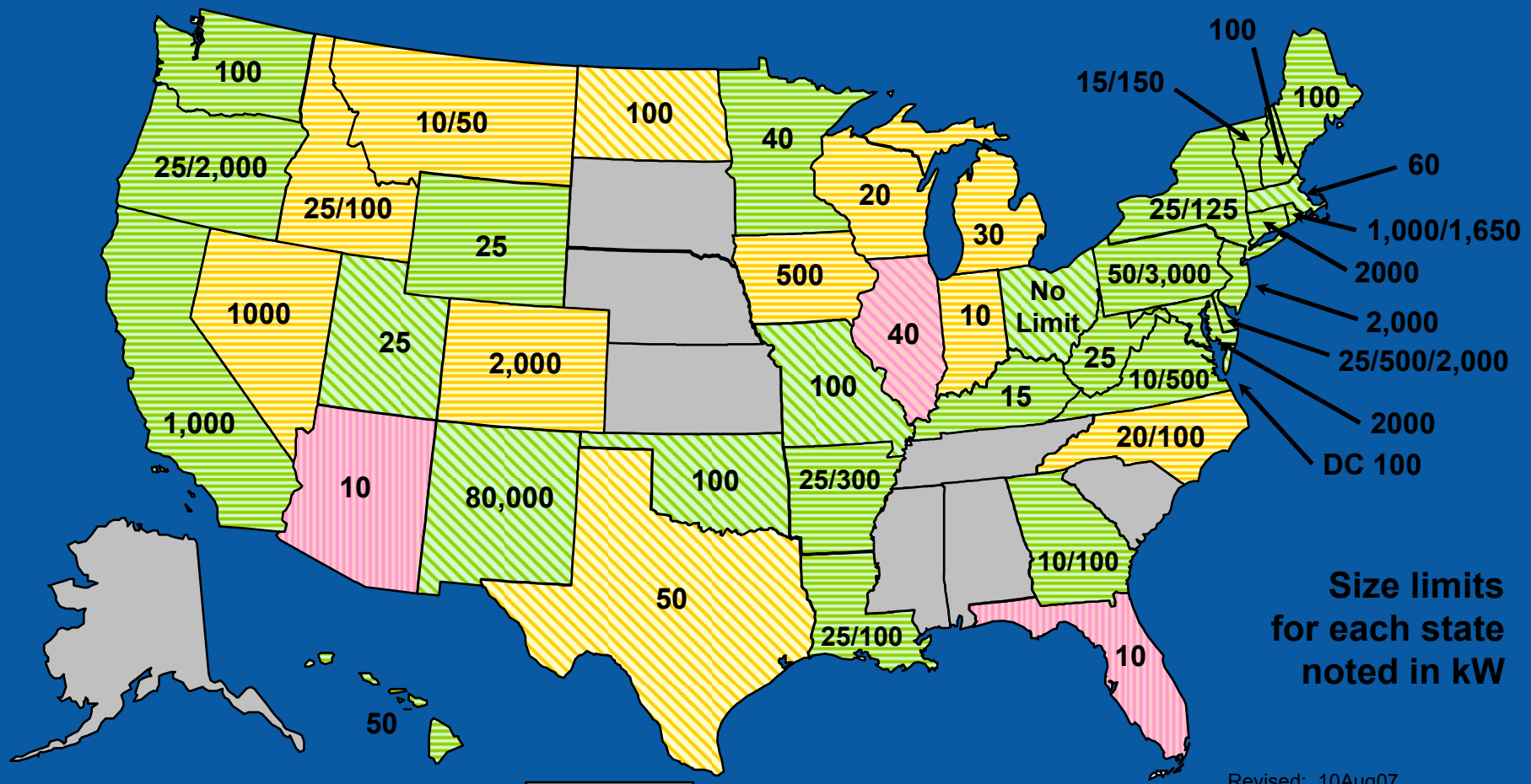

Size limits for each state noted in kW

Revised: 10Aug07
Source: www.dsireusa.org

Treatment of Net Excess Energy:

- Monthly
- Annual or monthly @ retail rate
- Varies by utility

- None
- Individual Utilities
- Investor-Owned Utilities Only, Not Rural Cooperatives
- Investor-Owned Utilities and Rural Cooperatives

Books by Paul Gipe

Available from Chelsea Green Publishing Co.
www.chelseagreen.com

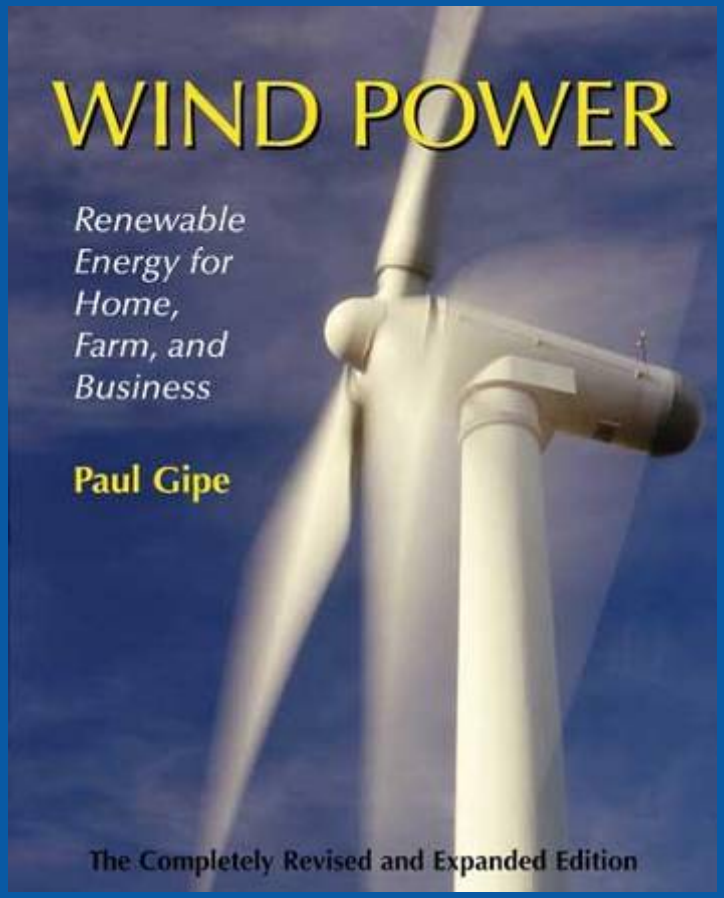

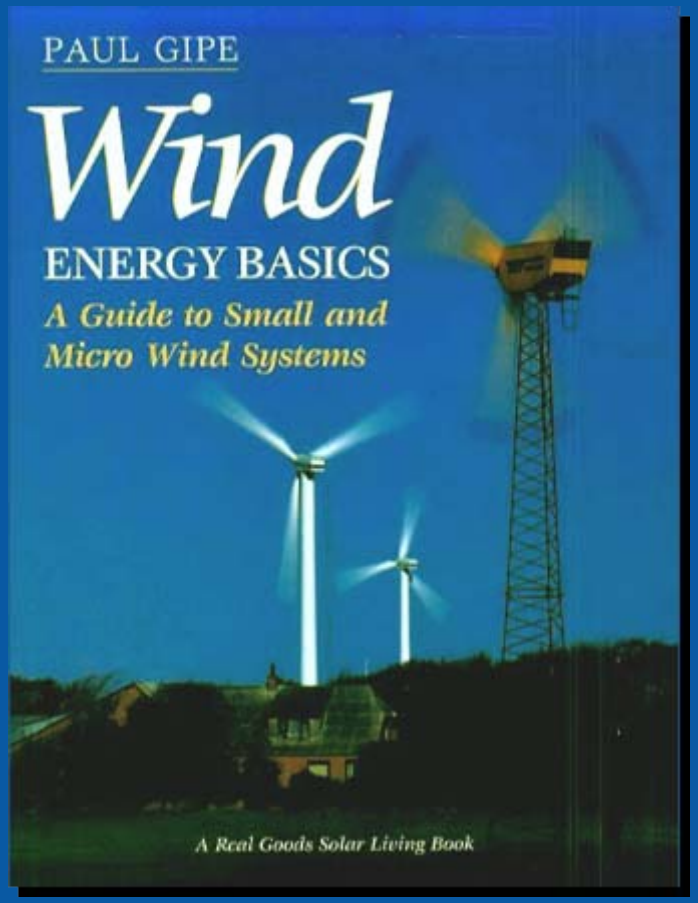

Small Wind Consumers Guide

A U.S.guide and about 40 state- and region specific specific guides are available from the National Renewable Energy Laboratory: http://www.eere.energy.gov/windpoweringamerica/small_wind.html

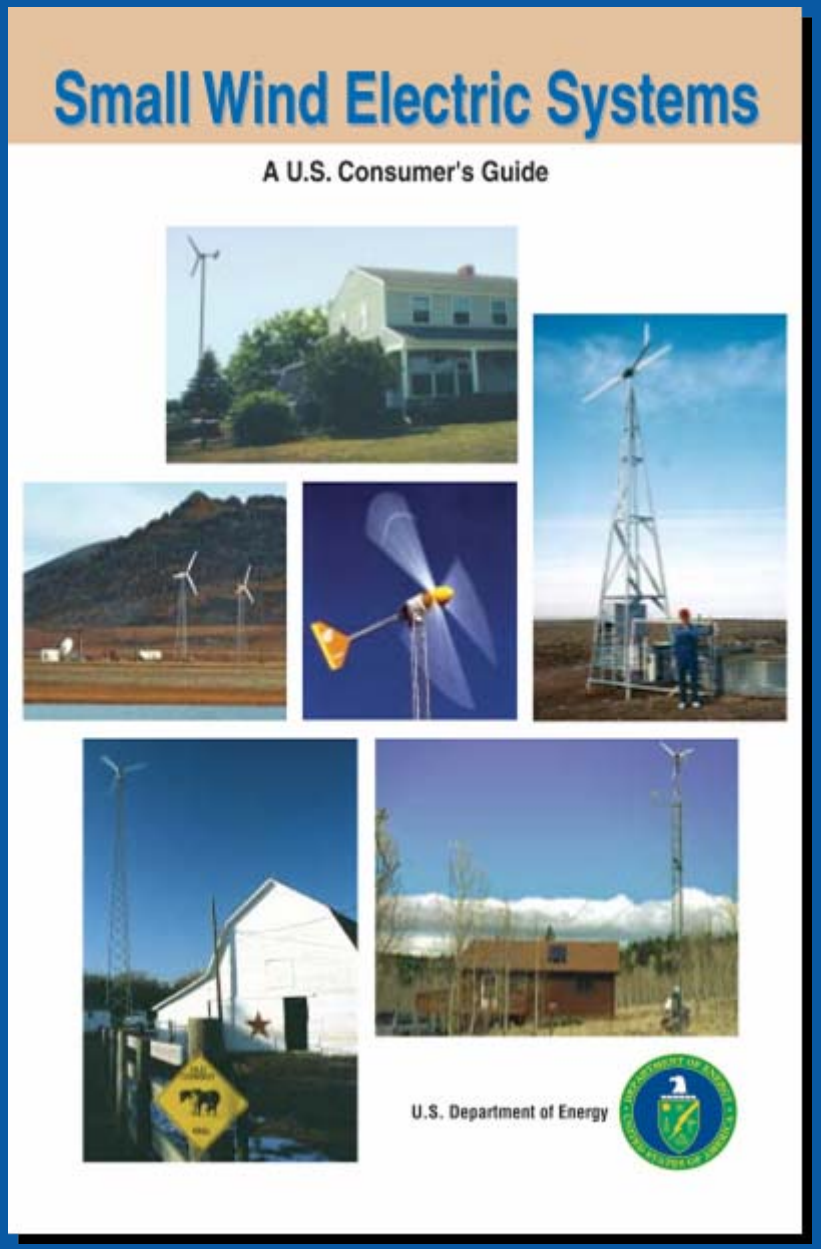

Other Sources of Information

- American Wind Energy Association http://www.awea.org/
  - A 63 minute video "An Introduction to Residential Wind Systems with Mick Sagrillo"
  - AWEA Small Wind Toolbox: www.awea.org/smallwind.html
- Danish Wind Industry Association guided tour and information. http://www.windpower.org/en/tour/
- AWS Scientific Inc. "Wind Resource Assessment Handbook" produced by for the National Renewable Energy Laboratory, Subcontract number TAT-5-15283-01, 1997 http://www.nrel.gov/publications
- Wind Energy Explained, J. F. Manwell, J. G. McGowan, A. L. Rogers John Wiley & Sons Ltd. 2002.

Future Distributed Wind Projects

- Independent Testing to IEC standards – test results released to the public via web
  - Power performance
  - Acoustics
  - Duration
  - System Safety & Function
  - Modified Power Quality
- Small Wind Certification Corporation (SWCC)
- Mid-size turbine development
- North American Board of Certified Energy Practitioners (NABCEP)
- National Electric Code