Wind for Schools
System Overview

Ian Baring-Gould

National Renewable Energy Laboratory

Larry Flowers, Marguerite Kelly, Trudy Forsyth & Tony Jimenez

Power System Approach

- Low-cost replicable system
- Simple to install
- Small - behind the fence and so net metering not an issue – but big enough to be noticed
- Demonstrates the process
- Non-threatening to utilities/co-ops or the community
- Operates will in low wind speed – needs to spin.

Walsenburg, CO

The Single System Approach

Although choice is good - in the early Colorado work it became clear that choice also made things much more difficult.

- Allowing the school to consider multiple turbine sizes, technologies, number of units, heights … made for so many choices that the decision making process became almost intolerable.
- Having multiple turbines also increases the complicity from the WAC and facilitator point of view

To minimize what will already be a complex process – we decided to go with one turbine package, knowing that as things progress other turbines will become options

Why the Skystream?

- Met all of the criteria
- First truly “Residential” wind turbine – designed for the residential market
- Southwest Windpower interested in supporting the WfS program
- Turbine developed with cooperation of NREL/DOE
  - Know the history
  - Good working relationship
  - Continued interaction
- Integrated monitoring and control
- However – it is a relatively new turbine model – with hundreds – not thousands – of installations.

SKYSTREAM 3.7™

www.skystreamenergy.com

Southwest Windpower

Renewable Energy Made Simple

Power System

Initially envision using a standard system package, but could branch out and provides a process for the use of larger or different systems.

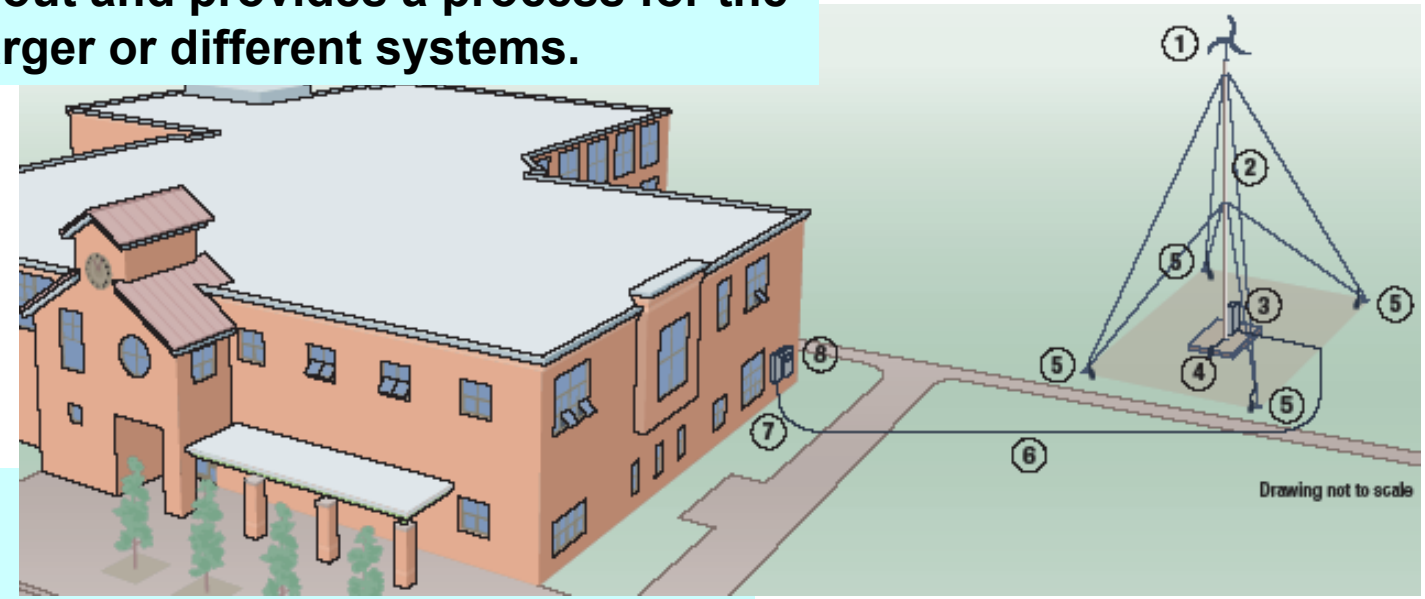

Components of Standard System

1) SkyStream 3.7, 1.8-kW wind turbine
2) 70-ft guyed tower
3) Tower/turbine base fused disconnect and junction box
4) Turbine foundation including tower base electrical grounding
5) Tower guy wire foundations and electrical grounding
6) School electrical connection
7) School disconnect and junction box
8) School's electrical power meter or interconnection point

The Power System

1) Skystream 3.7, 1.8-kW wind turbine
2) 70-ft guyed tower
3) Tower/turbine base fused disconnect and junction box
4) Turbine foundation including tower base electrical grounding
5) Tower guy wire foundations and electrical grounding
6) School electrical connection

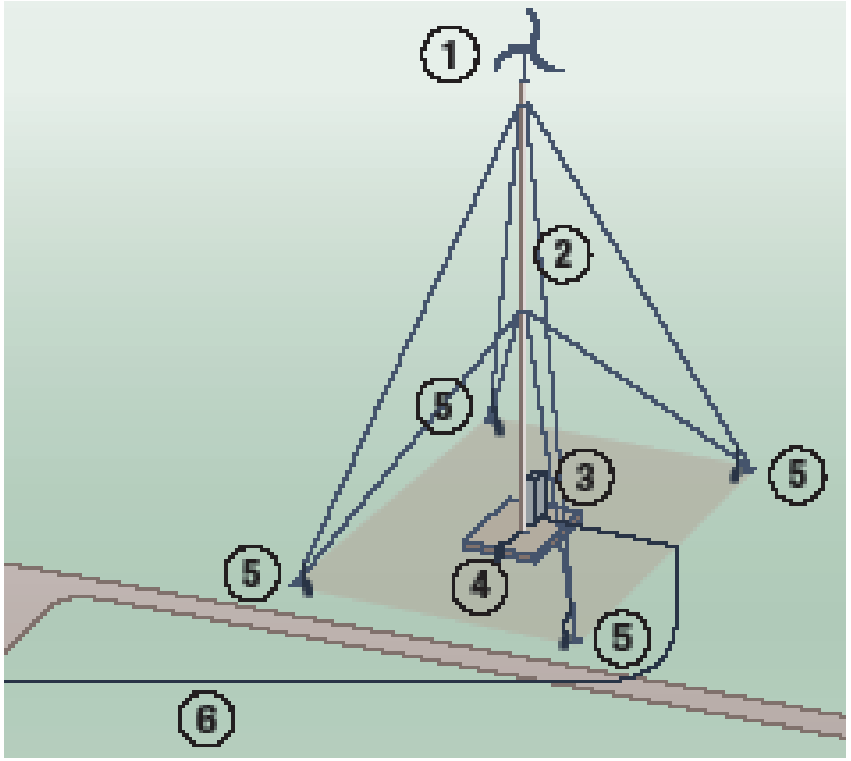

Skystream 3.7

Rated Capacity: 1.8 KW

Rotor: 12 feet (3.72 m); 50-325 RPM

Interconnection: Utility connected or battery charging

Alternator: Gearless, permanent magnet brushless

Voltage Output: 240 VAC (Optional 208 VAC)

Estimated Energy Production: 400 KWh per month at 12 MPH (5.4 m/s)

Weight: 170 pounds (77 kg)

Warranty: Five year limited

UL Listed, starting IEC testing

Type: Free Yaw, Down wind

Turbine Towers

The Skystream has several tower options

- 70 ft guyed
- 33.5 ft Monopole
- 45 ft Monopole
- 60 ft Monopole

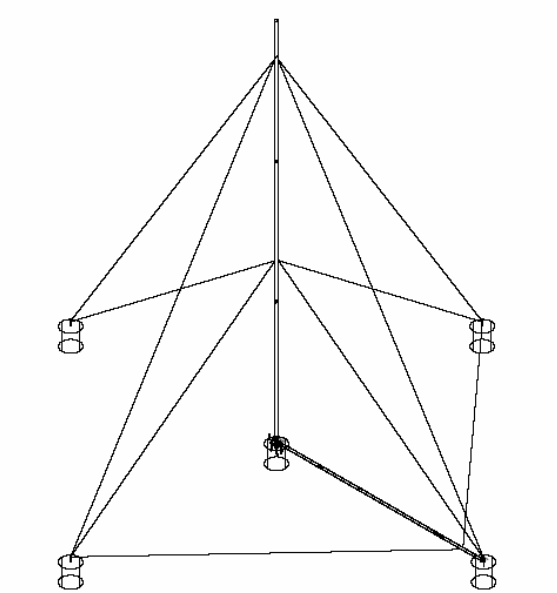

The program is primarily focusing on the 70ft guy's tower because it maximizes height while minimizing costs

Other towers can be considered as appropriate and when required – but clearly cost more money

Towers & Foundations

70ft guy tower

- Two levels of guy wires
- 70 ft installation diameter
- Five 36”d by 46” deep reinforced concrete hard point
- 150 feet circular protective are would be appropriate

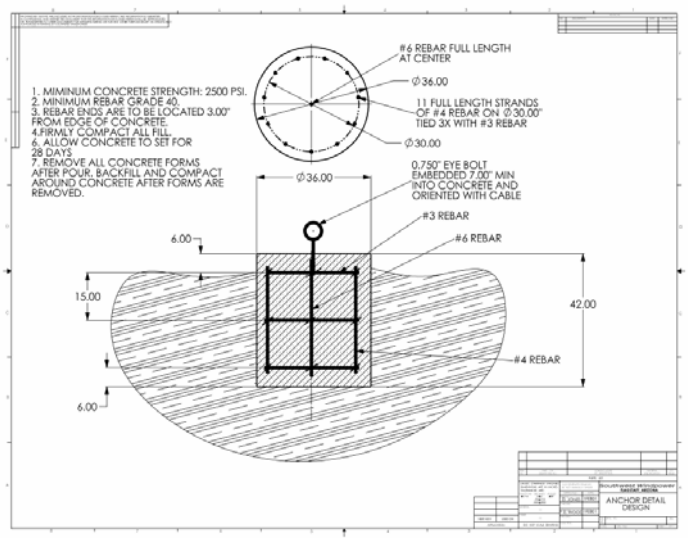

Pipe Used: 5 inch
Schedule 40

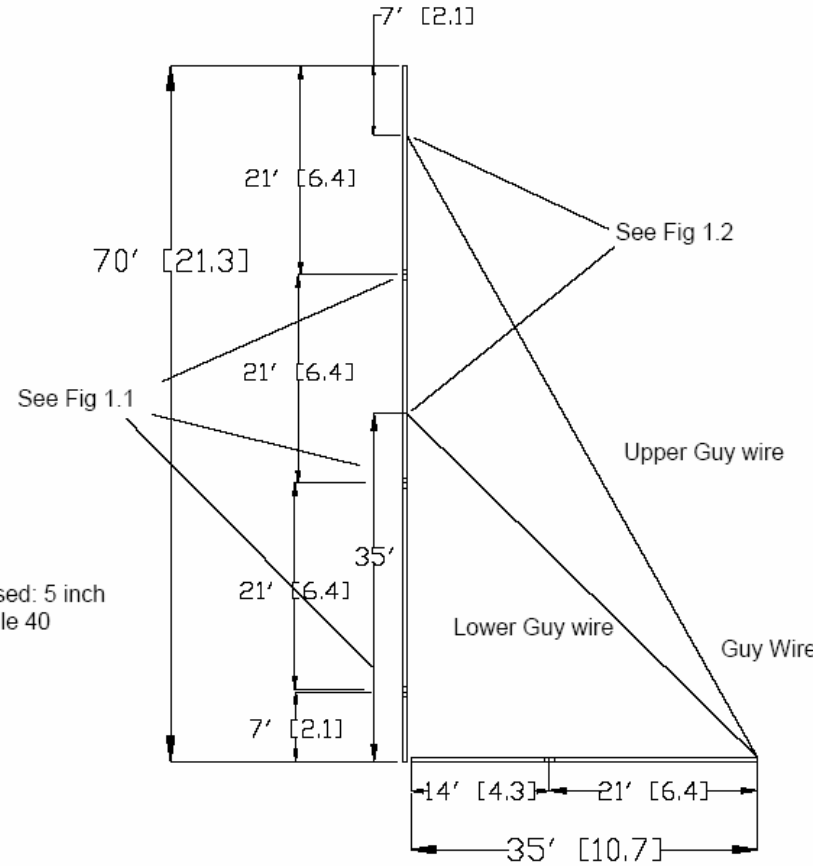

Towers & Foundations

45 ft monopole

- No guy wires
- Very small installation diameter
- Single 30” d, 6 – 18 ft deep concrete pile depending on soil concrete foundation.
- 100 feet circular protective area would be appropriate

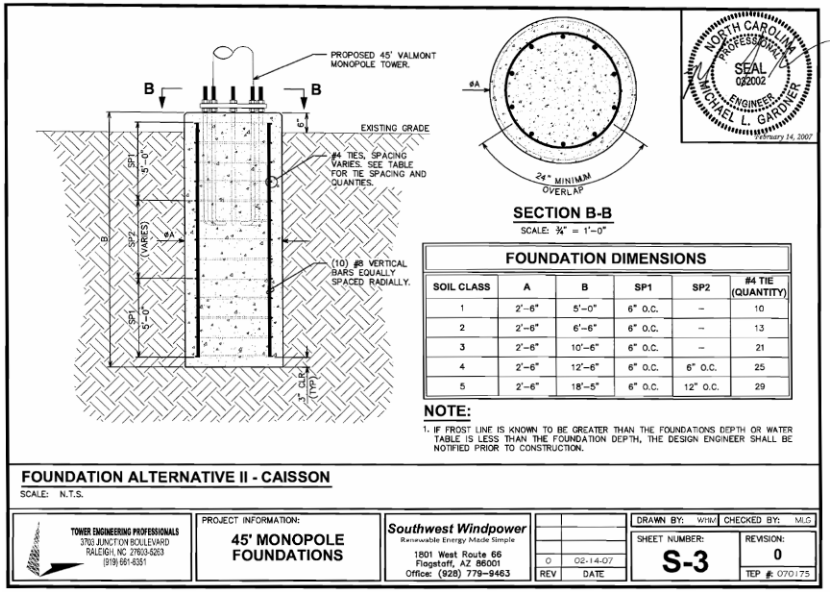

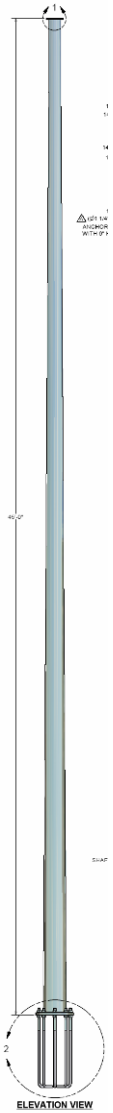

Safety

Simple formula:

d: Max falling distance

V: hub wind speed (m/s)

D: rotor diameter (m)

H: Hub height (m)

Ice Fall

at Standstill

$$d = v\frac{(D/2)+H}{15}$$

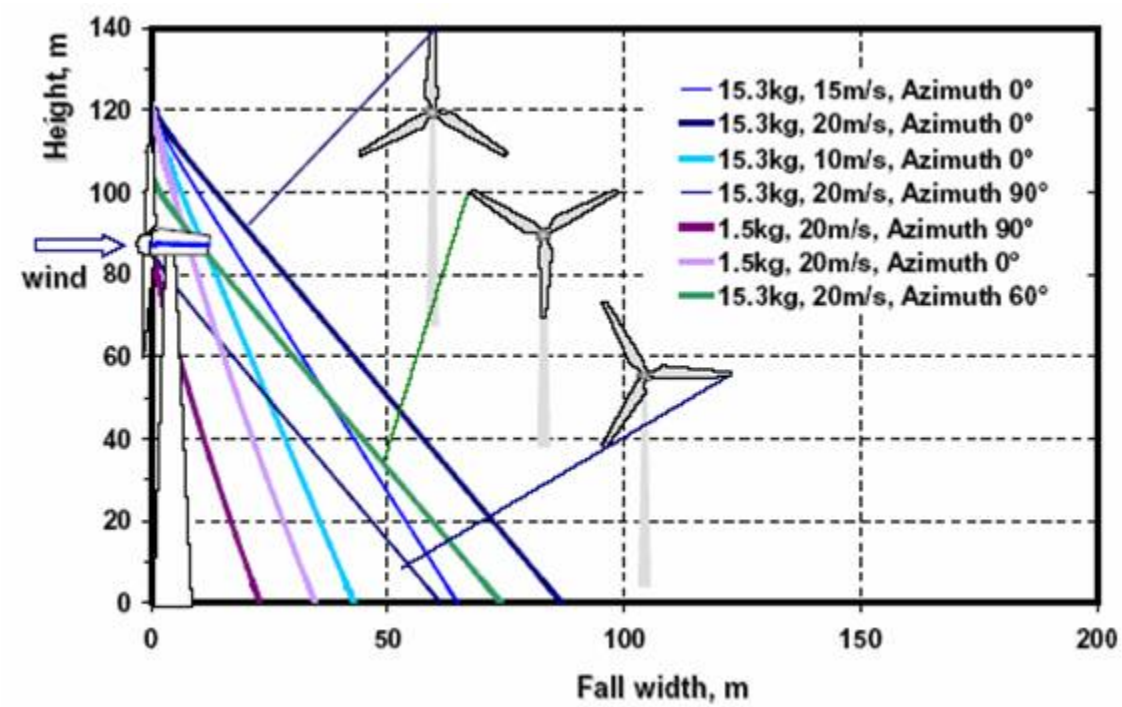

Advanced Analysis uses ice size, wind speed, and rotor position to assess safety areas. This is no different than ice falling off any tower or structure

Junction Boxes & Interconnect

Current program plan has for fused junction boxes at the base of the turbine and a standard disconnect where the electrical lines enter the building

Connection should be made at the schools main distribution box or some other approved location

Electrical Grounding

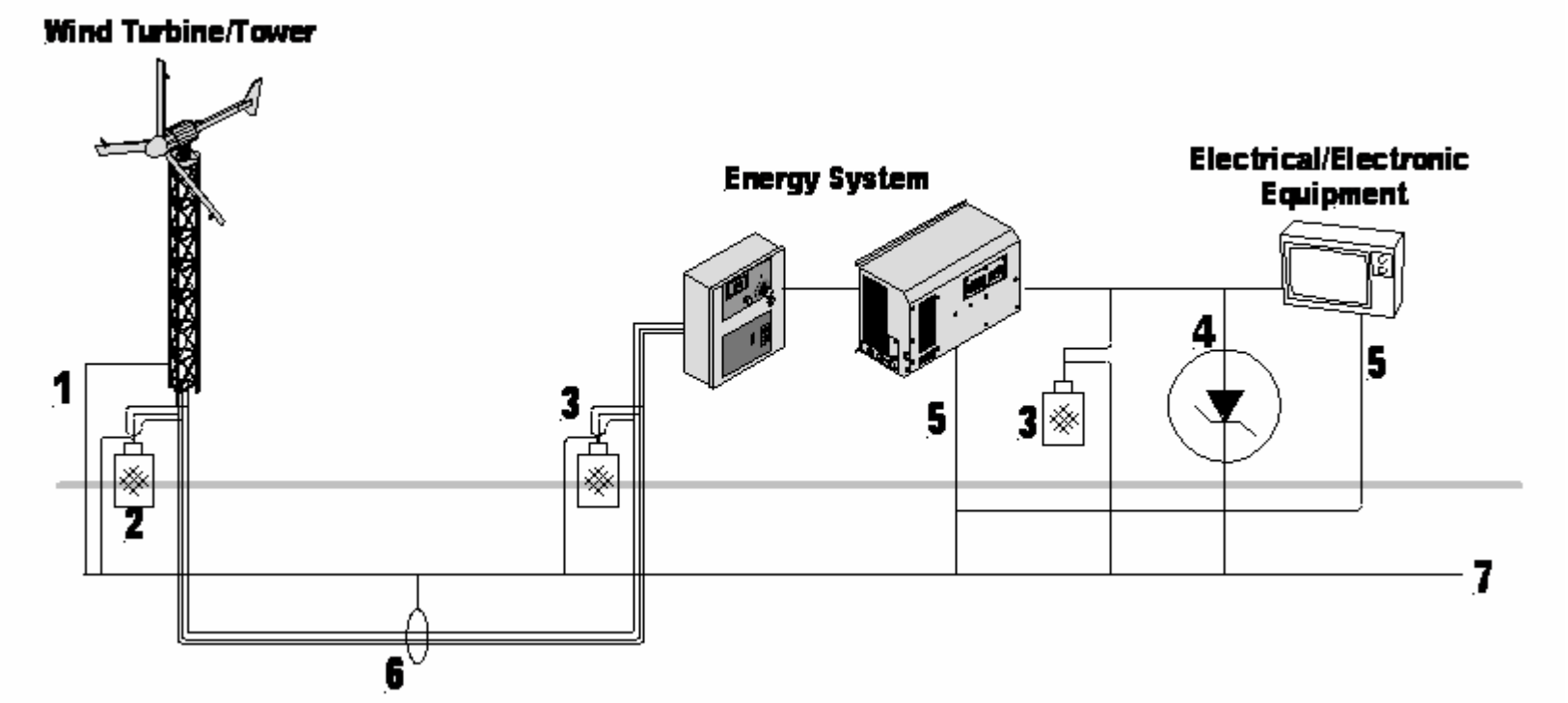

Grounding Details

Important issues for lightning & electrical grounding

- Solid ground for towers or PV arrays further than 15m from main junction
- Lightning arrestors to protect towers
- Lightning arrestors to protect the electrical/electronic equipment
- Transient voltage surge suppressors (TVSS) for the most sensitive electronic equipment (included in the school)
- Solid ground for all metallic housings of equipment
- Grounded metal conduit or dedicated grounding wire for buried power leads
- Low impedance connection to earth potential
- Tied earth planes to eliminate potential differences

The right way to ground guy wires

The wrong way

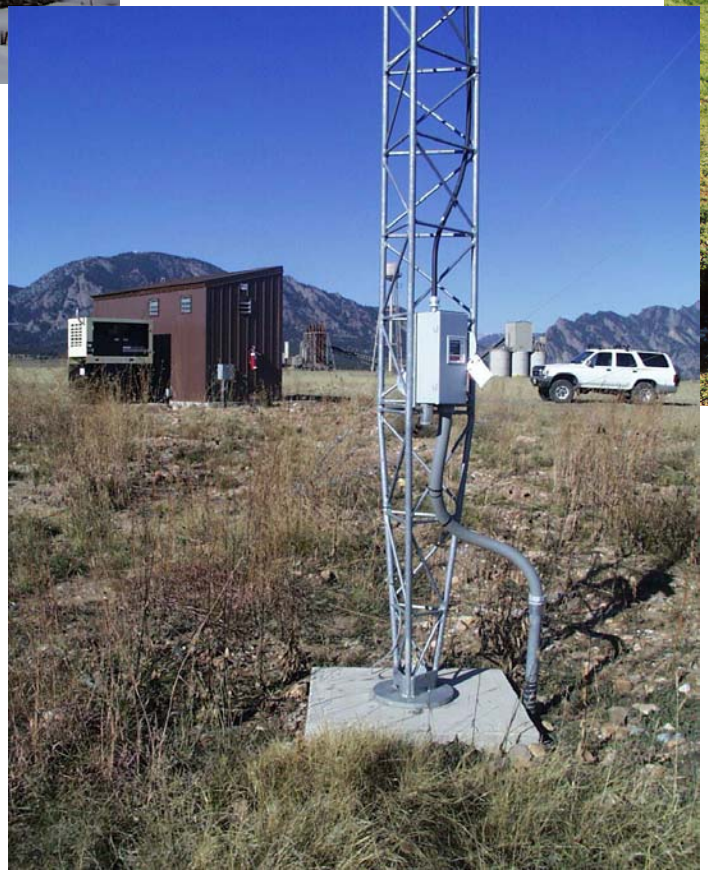

But this is OK for towers

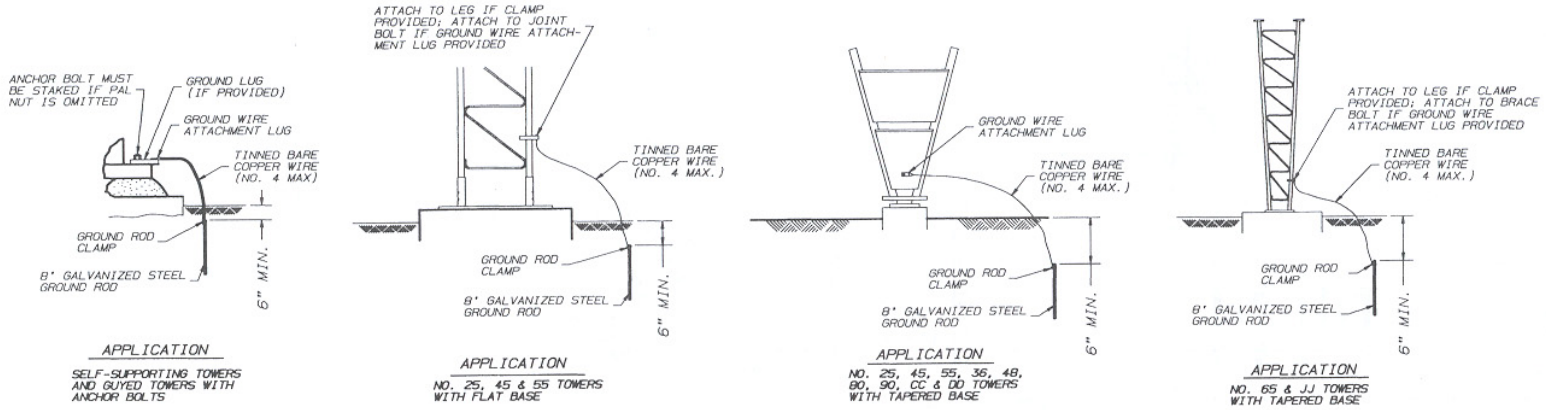

BASE GROUNDING KITS (BGK & BGKE)

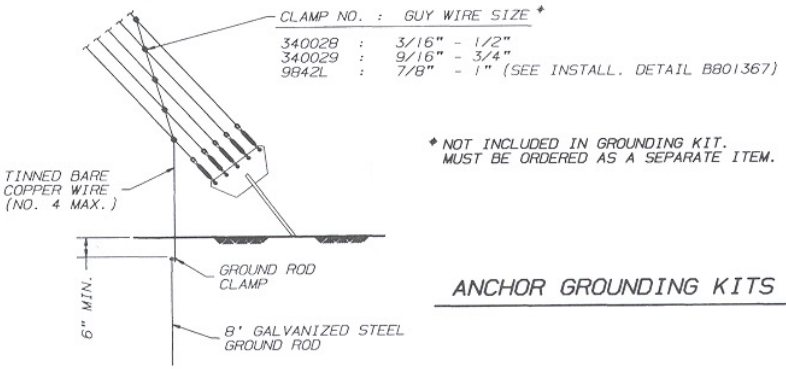

* NOT INCLUDED IN GROUNDING KIT. MUST BE ORDERED AS A SEPARATE ITEM.

GUY WIRE GROUNDING (AGK & AGKE)

ANCHOR GROUNDING KITS

GENERAL NOTES

1. USE SUFFICIENT BEND RADIUS TO PREVENT KINKING OF THE GROUND WIRE.
2. CUT WIRE TO PROPER LENGTHS. DO NOT COIL GROUND WIRE.

R5	RV. PER ANSI/TIA/EIA-222-F	1-2-95	JDM	
No. ▲	Revision Description	▲ Date	▲ Rev By	▲ Ckd By ▲ Appd By

THIS DRAWING IS THE PROPERTY OF ROHN. IT IS NOT TO BE REPRODUCED, COPIED OR TRACED IN WHOLE OR IN PART WITHOUT OUR WRITTEN CONSENT.

ROHN

Scale: NONE	By	Date	Title:
Drawn:	JER	11-20-73	TOWER GROUNDING METHODS
Checked:	WDU	11-27-73	
App. Eng.:	CW	11-27-73	
App. Sales:	MF	12-7-73	ENG. FILE: DRAWING NO.: C731105 R5

Connecting the Turbine to the School

- Need a wire run to connect the wind turbine to the school
- In almost all cases this will be a buried cable
- Can be a major cost driver for longer distances
- Cable size depends on distance (see chart)
- Minimum depth of 24in (61 cm) while in conduit may be buried at a depth of 18 in (46 cm).
- Likely item to ask for assistance from the local power cooperative

Wire Size	Maximum Distance			
	120 V	120/208 V	230 V	120/240 V
4 AWG (21.2 mm^2)	646 ft (197 m)	885 ft (270 m)	934 ft (285 m)	1017 ft (310 m)
6 AWG (13.3 mm^2)	407 ft (124 m)	557 ft (170 m)	588 ft (179 m)	640 ft (195 m)
8 AWG (8.4 V mm^2)	256 ft (78 m)	351 ft (93.3 m)	371 ft (113 m)	403 ft (123 m)
10 AWG (5.3 mm^2)	161 ft (41 m)	220 ft (67 m)	232 ft (70.7 m)	253 ft (77 m)
12 AWG (3.3 mm^2)	101 ft (31 m)	139 ft (42.4 m)	146 ft (44.5 m)	159 ft (48.5 m)
14 AWG (2.1 mm^2)	64 ft (20 m)	87 ft (26.5 m)	92 ft (28 m)	100 ft (30.5 m)

Project Costs

Total out of pocket: ~$5500

- SkyStream etc: $3500
- 70ft guy tower including grounding: $1500
- Electrical connections and other consumables: $ 500

Milford High School, Utah

Other costs / donations

Foundations – including concrete
Turbine school connection – trenching, cable & conduit
Electrical interconnection – need licensed electrician
Installation – person power and equipment
Fence – How much fencing is needed?

Local Coop's will have much of this on hand – they are in the business – so they can be of great help

Project Finances

Sample financial arrangement

- Reduced system cost ~$10,000
- $1,500 from the school
- $2,000 from selling lifetime green tags through a broker – Community Energy
- $2,500 from a buy-down fund or other grant source
- $4,000 provided in-kind by the community and utility

Payback - The real payback is in the education

- Skystream @70ft in a class 3 wind resource will produce about 6000 kWh/year
- At a retail rate of $0.05 / kWh this amounts to ~$300 per year in reduced energy costs
- Simple payback to school ~5 years

Skyline High School, Idaho

COMMUNITYENERGY
An Iberdrola company

NREL/DOE Pilot Project

John Mall High School
Walsenburg, Colorado

San Isabel Electric Association provided trenching, cabling, manpower

Community Energy donated equipment based on sales of Colorado Rural Green Tags to large businesses on the Front Range (urban-rural partnership)

NREL/Tom Potter provided technical assistance and organizational support

San Isabel Electric Association helping raise turbine